RE 10095/2021-11-24
Replaces: 2021-03-30

External gear pump SILENCE AZPS

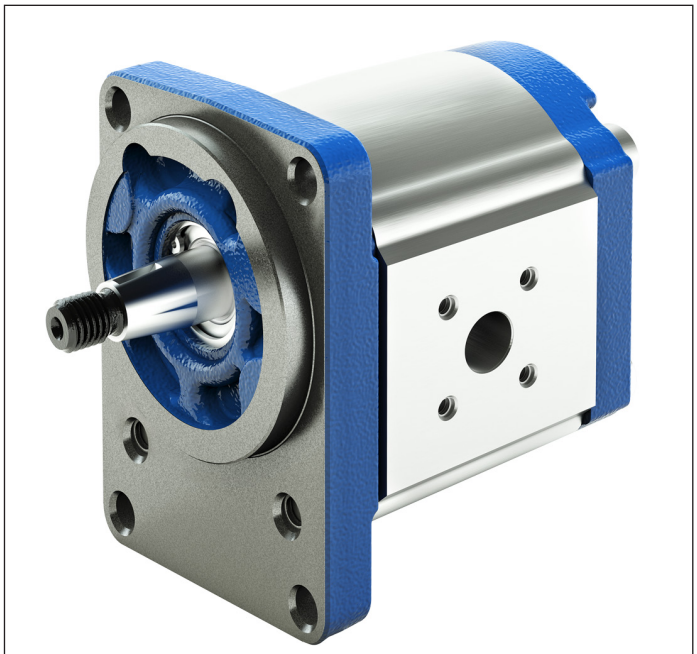

Note: Product photo deviates from delivery condition

- Platform F
- Fixed displacement
- Size 4 ... 28
- Continuous pressure up to 250 bar
- Intermittent pressure up to 280 bar

Features

- Optimized pressure pulsation, reduces noise emissions and oscillations in the system
- Consistent high quality based on large-volume production
- Long service life
- Slide bearings for high loads
- Drive shafts according to ISO or SAE and customer-specific solutions
- Line ports: connection flange or screw thread
- Combination of several pumps possible

Contents

Product description	2
Type codes	5
Technical data	9
Diagrams/characteristic curves	17
Dimensions	22
Project planning information	35
Information	36
Accessories	37

Product description

General information

It is the central task of external gear pumps to convert mechanical energy (torque and speed) into hydraulic energy (flow and pressure). To reduce heat losses, Rexroth's external gear units offer very high efficiencies. They are realized by pressure-dependent gap sealing and highly precise production technology.
Rexroth external gear pumps are built in four frame sizes: Platform B, F, N and G. Within each platform different sizes can be realized by different gear widths. The pumps are available in the versions Standard, High-Performance, SILENCE und SILENCE PLUS. Further configuration variants are given by different flanges, shafts, valve arrangements and multiple pump combinations.
Moreover, in the low-noise SILENCE pumps, the dual-flank principle helps to reduce flow pulsation by up to 75 %.

Pumping principle

The geometry of the displacement gearing, matched in form by the rotation of the drive shaft, results in the parabolic flow characteristic shown here on the left. In a standard pump, this characteristic is repeated each time a gear tooth meshes. With their dual-flank system, the flow pulsation of SILENCE pumps is reduced by 75 % – with correspondingly lower excitation of downstream system components – at double the fundamental frequency. During this process, the gear pair exhibits an extremely reduced rear flank backlash, so that hydraulic sealing is provided not just by the front flank of the driven gear, but also by the rear flanks. In this way, the front and rear flanks alternately contribute to flow displacement. And by adapting the shape of the metering notches, the expansion of the hydraulic line of action is half that of the standard pump.

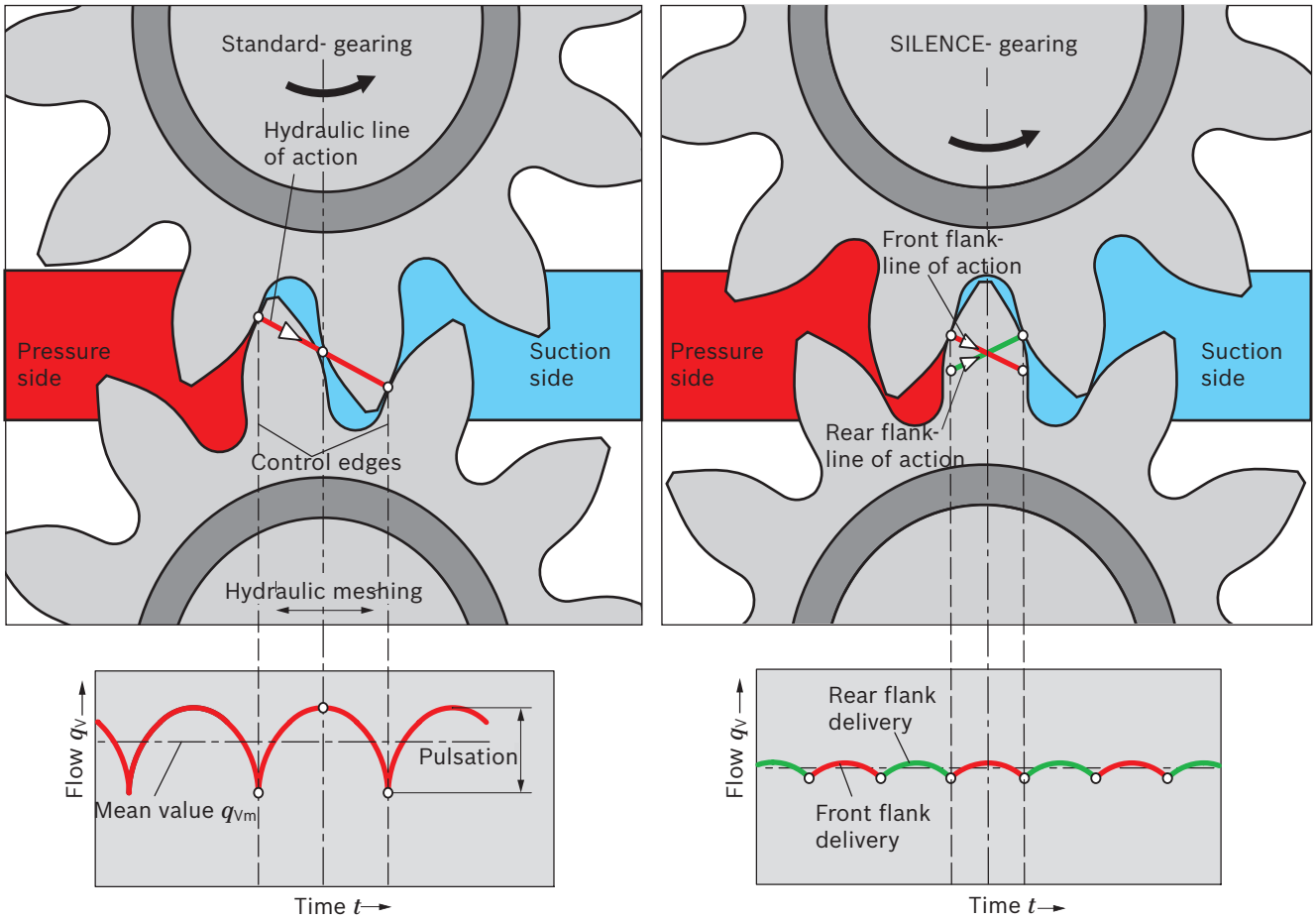

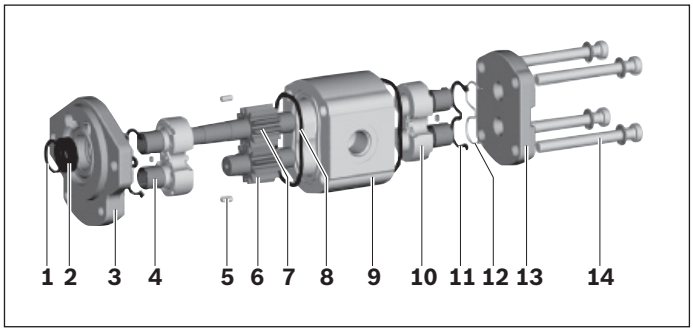

1	Retaining ring	**8**	Housing seal ring
2	Shaft seal	**9**	Pump housing
3	Front cover	**10**	Bearing bushing
4	Slide bearings	**11**	Axial field seal
5	Centering pin	**12**	Supporting element
6	Gear wheel	**13**	Rear cover
7	Drive shaft	**14**	Torx screws

Construction

The external gear pump consists essentially of a pair of gear wheels supported in bearing bushings and the housing with a front cover and an end cover.
The drive shaft protrudes from the front cover where it is usually sealed by the shaft seal. The bearing forces are absorbed by slide bearings. These bearings were designed for high pressures and have excellent emergency running properties, especially at low rotational speeds.
The gear wheels have 12 teeth. This keeps both flow pulsation and noise emission to a minimum. The sealing of the pressure chambers is achieved by forces depending on the working pressure. This ensures optimum efficiency. The working pressure generated in the gear chambers is transferred to the outside of the bearing bushings in specifically designed pressure fields in such a way that they are pressed against the gears and seal them up. The pressurized compression areas are limited by special seals.
The seal in the area between the gear teeth and the housing is ensured by the smallest of gaps that are set depending on the pressure between the gear teeth and housing.

External gear pump layout

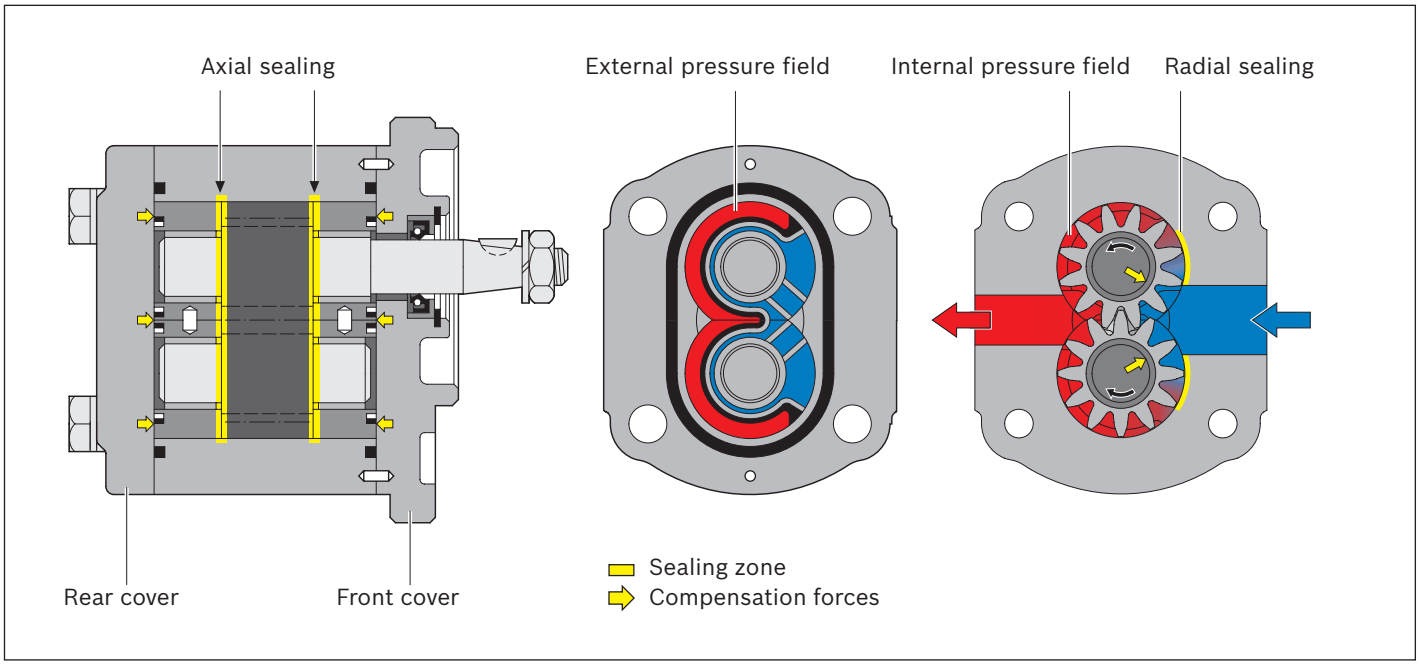

Gear pumps with integrated valves

In order to reduce piping complexity, a flow control valve or pressure-relief valve can be integrated in the cover of the gear pump. Such solutions are used, for instance, for the hydraulic oil supply of power steering systems. The pump delivers a constant flow or maximum pressure irrespective of the rotational speed. The residual flow is either returned internally to the suction port or distributed externally to other consumers.

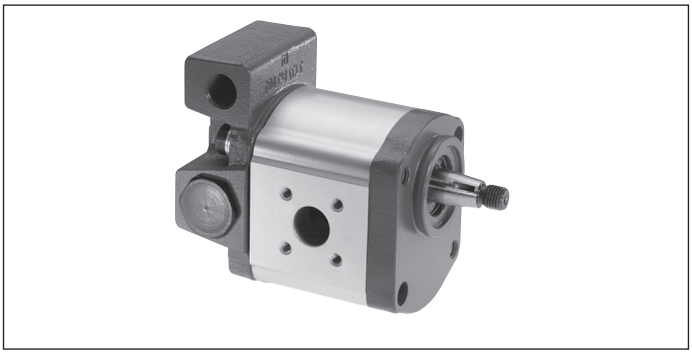

Pressure relief valve, external pressure discharge
p_1 = 5 to 250 bar

T180XX (example)

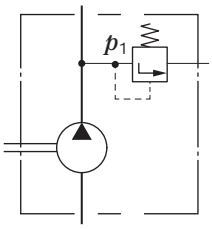

Pressure relief valve, pressure discharge into suction line
p_1 = 5 to 250 bar

D180XX (example)

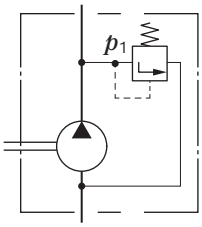

3-way flow control valve,
residual flow distributed externally, loadable
q_{const} = 2 to 30 l/min

EXXX12 (example)

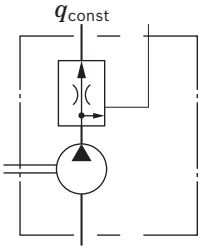

3-way flow control valve,
residual flow returned in suction line
q_{const} = 2 to 30 l/min

SXXX17 (example)

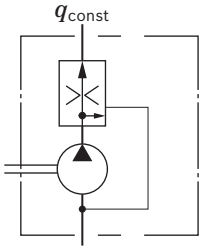

3-way flow control valve with pressure relief valve,
residual flow returned in suction line
q_{const} = 2 to 30 l/min; p_1 = 100 to 180 bar

V15011 (example)

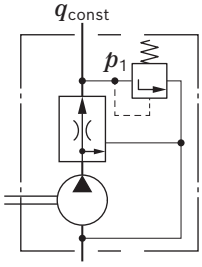

Type codes

Type code single pump

01	02		03	04		05	06	07	08	09	10	11	12	13		14
AZP	**S**	**–**			**–**										**–**	

External gear unit

01	External gear pump	**AZP**

Series

02	SILENCE, Plattform F	**S**

Serie

03	Standard bearing	**1**
	Reinforced bearing	**2**

Version

04	Phosphated, pinned	**1**
	Corrosion-protected, pinned[1)]	**2**

Size (NG)

05	Geometric displacement V_g [cm^3], see “Technical data”	**004**	**005**	**008**	**011**	**014**	**016**	**019**	**022**	**025**	**028**

Direction of rotation

06	Viewed on drive shaft	clockwise	**R**
		counter-clockwise	**L**

Drive shaft			**Suitable front cover**	
07	Tapered shaft	1 : 5	B, P	**C**
		1 : 5	A	**S**
		1 : 8	O	**H**
	Tang drive		M, T	**N**
	Splined shaft	SAE J744 16-4 9T	R, C	**R**
		SAE J744 19-4 11T	R, C	**P**
		DIN 5482 B17 × 14	B, P	**F**
	Parallel keyed shaft	SAE J744 16-1 A	R	**Q**

Front cover

08	Rectangular flange	Ø80 mm		**B**
		Ø36.47 mm		**O**
	2-bolt flange	Ø82.55 mm	SAE J744 82-2 A	**R**
		Ø101.6 mm	SAE J744 101-2 B	**C**
	2-bolt mounting	Ø52 mm	with seal ring	**M**
		Ø50 mm	connection variant P	**P**
	4-bolt mounting	Ø52 mm	with seal ring	**T**
	Outrigger bearing	Ø80 mm	type 1	**A**

Line connection		**004**	**005**	**008**	**011**	**014**	**016**	**019**	**022**	**025**	**028**	
09	Pipe thread according to ISO 228-1	●	●	●	●	●	●	●	●	●	●	**01**
	Metric thread according to ISO 6149, O-ring	●	●	●	●	●	●	●	●	●	●	**50**
	UN-thread according to ISO 11926-1 / ASME B 1.1, O-ring	●	●	●	●	●	●	●	●	●	●	**12**
	Square flange	●	●	●	●	●	●	●	●	●	●	**20**
	Square flange	●	●	●	●	●	●	●	●	●	●	**30**

1) Corrosion-protected version, details see “Technical data“

01	02		03	04		05	06	07	08	09	10	11	12	13		14
AZP	**S**	**–**			**–**										**–**	

Sealing material

10	NBR (nitrile rubber)	**M**
	FKM (fluoroelastomer)	**P**
	NBR (nitrile rubber), shaft seal in FKM (fluoroelastomer)	**K**

Rear cover

11	Without valve (standard)			**B**
	With pressure relief valve	Pressure discharge	external	**T**
			internal	**D**
	With flow control valve	Residual flow	external	**E**
			internal	**S**
	With flow control valve and pressure relief valve			**V**

Valve setting pressure relief valve (parameter only required for rear cover with pressure relief valve)

12	Without pressure relief valve	**XXX**
	Cracking pressure in bar, 3-digit, e.g. 180 bar	**180**

Valve setting flow control valve (parameter only required for rear cover with flow control valve)

13	Without flow control valve	**XX**
	Flow in l/min, 2-digit, e.g. 9 l/min	**09**

Special version

14	Special version	**SXXXX**

● = Available **–** = Not available

Note

- Not all of the variants according to the type code are possible.
- Please select the desired pump with the help of the selection table (preferred types) or after consultation with Bosch Rexroth.
- Special options are available on request.

Type code multiple pump

01	02		03	04		05	06	07	08	09	10	11	12
AZP		–			–								

External gear unit

01	External gear pump	**AZP**

Series[1)]

02	High Performance	1.0 to 7.1 cm^3/U	Data sheet 10088	**B**
		4.0 to 28 cm^3/U	Data sheet 10089	**F**
		20.0 to 36 cm^3/U	Data sheet 10091	**N**
		22.5 to 100 cm^3/U	Data sheet 10093	**G**
	SILENCE	4.0 to 28 cm^3/U	Data sheet 10095	**S**
		20.0 to 36 cm^3/U	Data sheet 10092	**T**
		22.5 to 63 cm^3/U	Data sheet 10098	**U**
	SILENCE PLUS	12.0 to 28 cm^3/U	Data sheet 10094	**J**

Unit version (according to data sheet of pump stage 1)

03	Standard bearing	**1**
	Reinforced bearing	**2**

Version (according to data sheet of pump stage 1)

04	Phosphated, pinned	**1**
	Corrosion-protected, pinned	**2**

Size (NG)[2)]

05	In accordance with data sheet for the individual series	

Direction of rotation

06	Viewed on drive shaft	clockwise	**R**
		counter-clockwise	**L**

Drive shaft (relates to pump stage 1)

07	In accordance with data sheet of pump stage 1	

Front cover (relates to pump stage 1)

08	In accordance with data sheet of pump stage 1	

Line connection (per pump stage)[3)]

09	In accordance with data sheet for the individual series	

Sealing material

10	NBR (nitrile rubber)	**M**
	FKM (fluoroelastomer)	**P**
	NBR (nitrile rubber), shaft seal in FKM (fluoroelastomer)	**K**

Rear cover (relates to last pump stage)

11	In accordance with data sheet of the last pump stage	

Special version

12	Special version	**SXXXX**

1) A letter is to be selected for each pump stage, e.g. 3-way pump AZPJ + AZPJ + AZPB: **JJB**
2) A numerical value is to be selected for each pump stage, e.g.3-way pump **028/016/2.0**
3) A numerical value is to be selected for each pump stage, e.g.3-way pump **202020**

Note

- Not all of the variants according to the type code are possible.
- Please select the desired pump with the help of the selection table (preferred types) or after consultation with Bosch Rexroth.
- Special options are available on request.

Example 4-way pump:

AZPG...032... + AZPG...022... + AZPJ...016... + AZPJ...012...

01	02		03	04		05	06	07	08	09	10	11
AZP	**GGJJ**	**–**	**2**	**2**	**–**	**032/022/016/012**	**R**	**C**	**B**	**20202020**	**K**	**B**

Technical data

Table of values

Size					4	5	8	11	14	16	19	22	25	28
Series					Series 1x						Series 2x			
Displacement geometric, per revolution			V_g	cm³	4	5.5	8	11	14	16	19	22.5	25	28
Pressure at suction port S [1]		absolute	p_e	bar	0.7 ... 3									
Maximum continuous pressure			p_1	bar	250	250	250	250	250	250	250	220	195	170
Maximum intermittent pressure [2]			p_2	bar	280	280	280	280	280	280	280	250	225	200
Maximum pressure peaks			p_3	bar	300	300	300	300	300	300	300	290	265	240
Minimum speed at		p < 100 bar	n_{min}	rpm	600	500	500	500	500	500	500	500	500	500
	ν = 12 mm²/s	p = 100 ... 180 bar	n_{min}	rpm	1200	1200	1000	1000	800	800	800	800	800	800
		p = 180 bar ... p_2	n_{min}	rpm	1400	1400	1400	1200	1000	1000	1000	1000	1000	1000
	ν = 25 mm²/s	at p_2	n_{min}	rpm	700	700	700	600	500	500	500	500	500	500
Maximum speed		at p_2	n_{max}	rpm	4000	4000	4000	3500	3000	3000	3500	3500	3000	3000

[1] In the case of tandem pumps, the suction-side pressure difference between the individual pump stages must not exceed 0.5 bar.
[2] Limited service life with threaded line ports and p_2 > 210 bar

General technical data

Weight	m	kg	See chapter Dimensions
Installation position			No restrictions
Mounting type			Flange or through-bolting with spigot
Line connections			See chapter Dimensions
Direction of rotation, viewed on drive shaft			Clockwise or counter-clockwise, the pump may only be driven in the direction indicated
Drive shaft loading			Axial and radial forces only after consultation
Ambient temperature range	t	°C	-30 to +80 with NBR seals (NBR = nitrile rubber)
			-20 to +110 with FKM seals (FKM = fluoroelastomer)

Corrosion protection

Version 1 (phosphated): Unit with low corrosion protection	The surface serves for protection against flash rust during transport or as priming for painting.	
Version 2 (galvanized, passivated): Unit with corrosion protection	Degree of corrosion and rust according to DIN EN ISO 9227	Test duration 96 h: no red rust

Note

- Safety requirements pertaining to the whole systems are to be observed.
- Please contact us for applications with frequent load changes.

Pressure definition

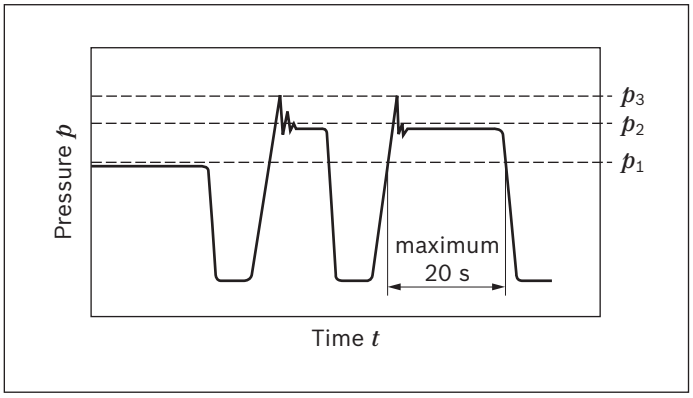

p_1: Continuous pressure max.
p_2: Intermittent pressure max.
p_3: Pressure peaks max.

Determining the operating characteristics		
Flow	$q_v = \frac{V_g \times n \times \eta_v}{1000}$	[l/min]
Torque	$M = \frac{V_g \times \Delta p}{20 \times \pi \times \eta_{hm}}$	[Nm]
Power	$P = \frac{2\pi \times M \times n}{60000} = \frac{q_v \times \Delta p}{600 \times \eta_t}$	[kW]

Key

V_g	Displacement per revolution [cm³]
Δp	Differential pressure [bar]
n	Rotational speed [rpm]
η_v	Volumetric efficiency
η_{hm}	Hydraulic-mechanical efficiency
η_t	Total efficiency ($\eta_t = \eta_v \cdot \eta_{hm}$)

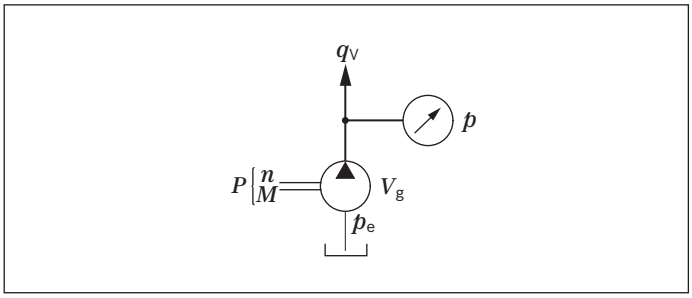

Note

- You can find diagrams for a rough calculation in chapter "Diagrams / Characteristic curves"..

Hydraulic fluids

The external gear unit is designed for operation with HLP mineral oil according to DIN 51524, 1-3. Under higher load, however, Bosch Rexroth recommends at least HLP compliant with DIN 51524 Part 2.
See the following data sheet for application instructions and requirements for selecting hydraulic fluid, behavior during operation as well as disposal and environmental protection before you begin project planning:

- 90220: Hydraulic fluids based on mineral oils and related hydrocarbons

Other hydraulic fluids on request.

Selection of hydraulic fluid
Bosch Rexroth evaluates hydraulic fluids on the basis of the Fluid Rating according to the technical data sheet 90235.
Hydraulic fluids with positive evaluation in the Fluid Rating are provided in the following technical data sheet:

- 90245: Bosch Rexroth Fluid Rating List for Rexroth hydraulic components (pumps and motors)

The hydraulic fluid should be selected so that the operating viscosity in the operating temperature range is within the optimum range (ν_{opt}; see selection diagram).

Viscosity and temperature of hydraulic fluids

Viscosity range	
Permissible in continuous operation	ν = 12 ... 800 mm²/s
Recommended in continuous operation	ν_{opt} = 20 ... 100 mm²/s
Permissible for cold start	ν_{max} ≤ 2000 mm²/s
Temperature range	
With NBR seals (NBR = nitrile rubber)	t = -30 °C ... +80 °C
With FKM seals (FKM = fluoroelastomer)	t = -20 °C ... +110 °C

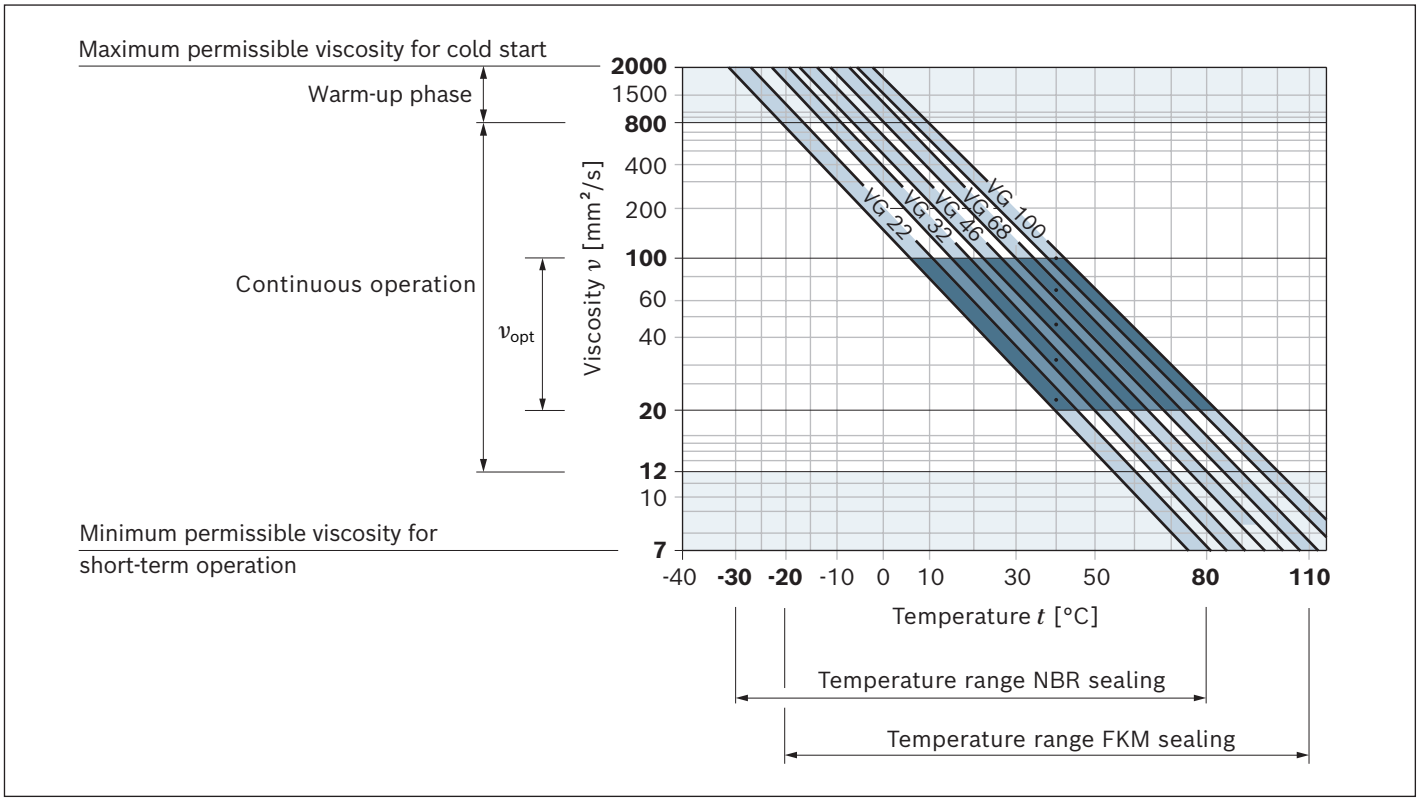

Observe the instructions for the filtration of the hydraulic fluid (see chapter Project planning information).

Direction of rotation

The dimensional drawings in the chapter Dimensions represent pumps for clockwise rotation. The position of the drive shaft or the position of suction and pressure port changes for counter-clockwise rotation.

Direction of rotation, viewed on drive shaft

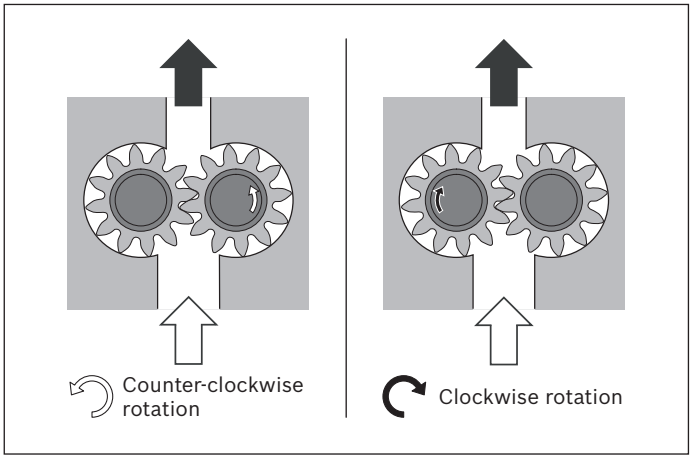

Drives

1. Elastic couplings

- The coupling must not transfer any radial and axial forces onto the pump.
- The maximum admissible radial run-out deviation from the shaft to the fitting slot is 0.2 mm.
- Admissible shaft shifting see installation information of the coupling manufacturers.

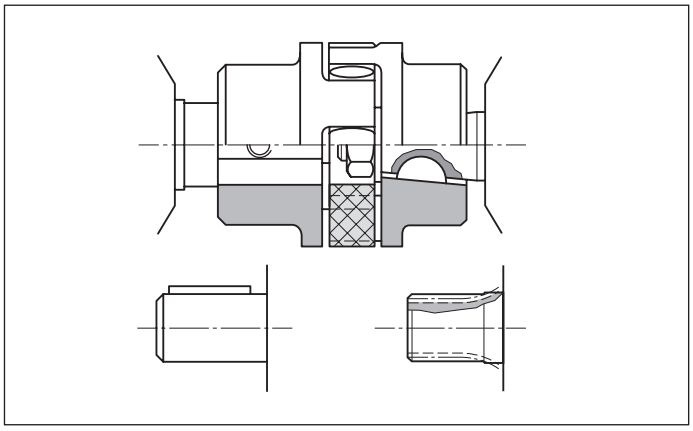

2. Coupling sleeve

- To be used on splined shaft profile according to DIN and SAE.
- Attention: No radial or axial forces are permitted on the pump shaft or coupling sleeve. The coupling sleeve must be free to move axially.
- The distance between the pump drive shaft and drive shaft on the customer side must 2^{+1} mm.
- Provide installation space for the snap ring.
- Oil-bath or oil-mist lubrication is required.

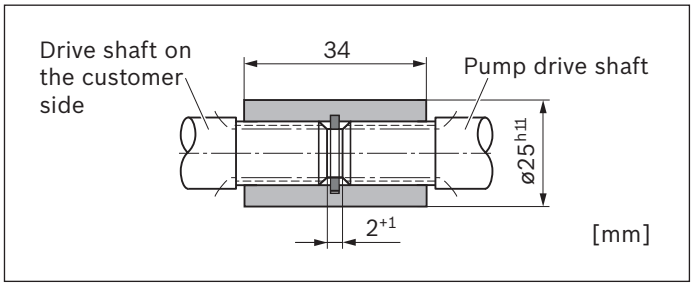

3. Tang drive coupling

- For attaching the pump directly to an electric motor or combustion engine, gear, etc.
- The pump shaft has a special tang drive and driver (**3**) (scope of delivery see offer drawing)
- There is no shaft sealing
- Drive-side installation and sealing according to the following recommendations and dimensions
- Drive shaft on the customer side (**1**)
  - Case-hardening steel DIN EN 10084 e.g. 20MnCrS5 case-hardened 0.6 mm deep; HRC $60^{\pm 3}$
  - Seal ring running surface ground without rifling $R_t \leq 4$ µm
- Radial shaft seals on the customer side (**2**)
  - Provide with rubber cover (see DIN 3760, type AS or double-lipped ring)
  - Provide installation edge with 15° slant or install shaft seal with protection sleeve

AZPS-1x (sizes 4 ... 16)

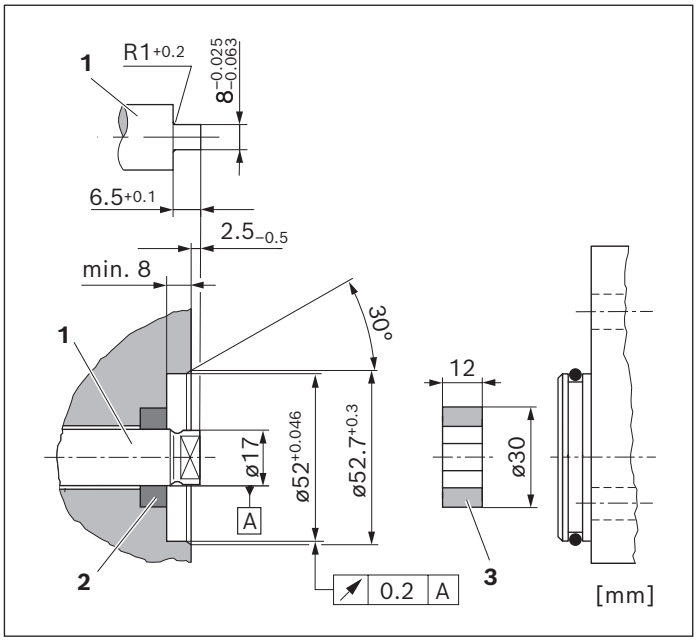

AZPS-2x (sizes 19 ... 28)

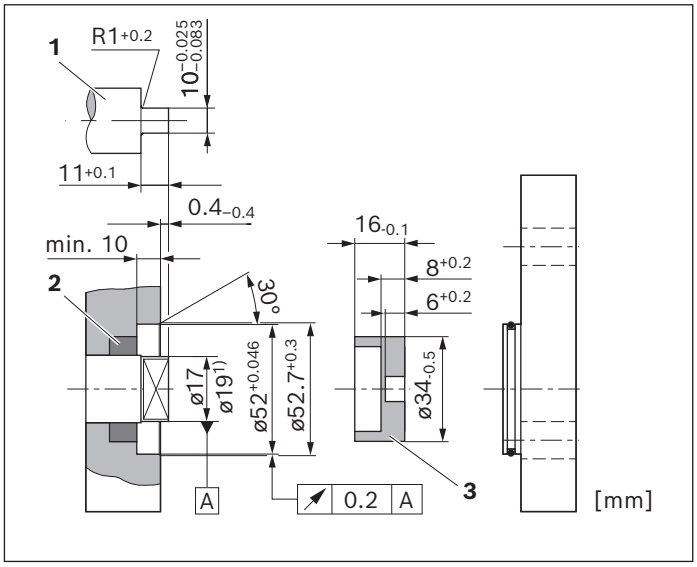

1) See offer drawing (maximum 34 mm)

4. V-belts and straight gear wheels or helical toothed gear drives without outrigger bearing

For V-belt or gear wheel drives, please contact us specifying the application and mounting conditions (dimensions a, d_m, d_w and angle α). For helical toothed gear drives, details of the helix angle β are also required.

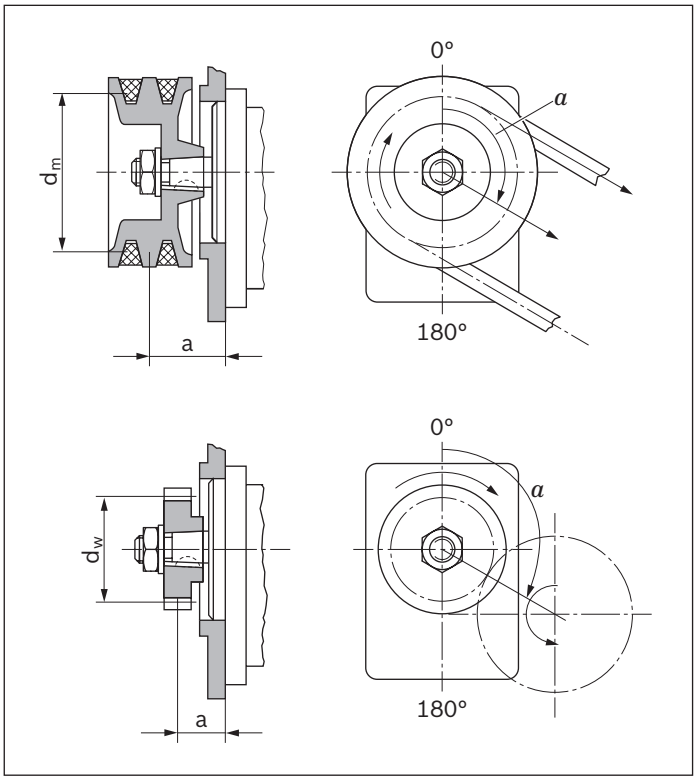

5. Outrigger bearing

Outrigger bearing are offered to eliminate possible problems when the pumps are driven by V-belts or gear wheels. The diagrams show the radial and axial load capacity in relation to a bearing service life of L_H = 1000 h.

Front cover A (type 1)

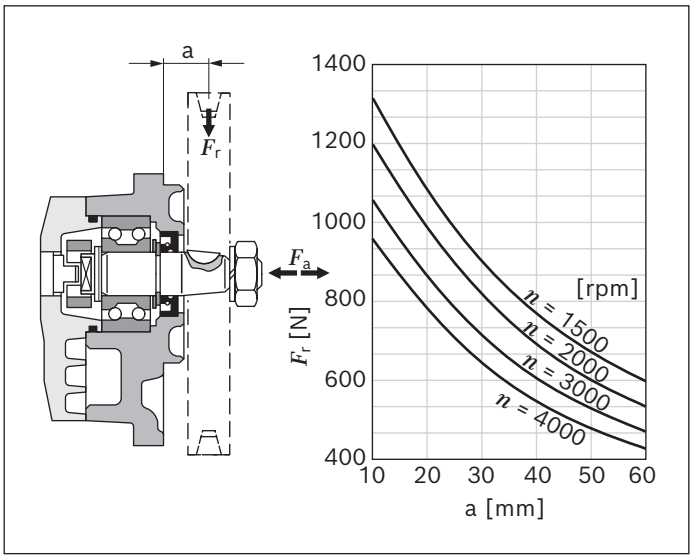

Maximum transferable drive torques

Splined shafts

Drive shaft		M_{max}	Size	$p_{2\ max}$
Code	**Designation**	**Nm**		**bar**
F	DIN 5482 B17 × 14	100	4 ... 16	280
			19	280
			22	250
			25	225
			28	200
R	SAE J744 16-4 9T	110	4 ... 16	280
			19	280
			22	250
			25	225
			28	200
P	SAE J744 19-4 11T	180	4 ... 16	280
			19	280
			22	250
			25	225
			28	200

Tapered shafts

Drive shaft		M_{max}	Size	$p_{2\ max}$
Code	**Type**	**Nm**		**bar**
C	1 : 5	155	4 ... 16	280
			19	280
			22	250
			25	225
			28	200
H	1 : 8	160	4 ... 16	280
			19	280
			22	250
			25	225
			28	200

Parallel keyed shafts

Drive shaft		M_{max}	Size	$p_{2\ max}$
Code	**Designation**	**Nm**		**bar**
Q	SAE J744 16-1 A	55	4 ... 11	280
			14	220
			16	190
			19	160
			22	130
			25	120
			28	110

Tang drive

Drive shaft		M_{max}	Size	$p_{2\ max}$
Code	**Designation**	**Nm**		**bar**
N	Tang drive	65	4 ... 11	280
			14	260
			16	220
		85	19	250
			22	210
			25	190
			28	170

With outrigger bearing

Drive shaft	Outrigger bearing	M_{max}	Size	$p_{2\ max}$
Code	**Type (code)**	**Nm**		**bar**
S	Type 1 (A) (with tang drive coupling)	65	4 ... 11	280
			14	260
			16	230
			19	190
			22	160
			25	140
			28	130
	Type 1 (A) (with sleeve)	160	4 ... 16	280
			19	280
			22	250
			25	225
			28	200
	Type 2 (G)		4 ... 16	280
			19	280
			22	250
			25	225
			28	200

Multiple gear pumps

Gear pumps are well-suited to multiple arrangements, whereby the drive shaft of the first pump stage is extended to a second and possibly third pump stage. The shaft of the individual pump sections are normally connected via a driver or via a splined coupling (reinforced through drive).
The individual pump stages are usually hydraulically isolated and have separate suction ports. On request a common suction port or separated but hydraulically connected suction ports are available.
For the configuration of multiple pumps, Bosch Rexroth recommends arranging the pump stage with the largest displacement on the drive side.

Note
Basically, the parameters of the single pumps apply, however certain restrictions need to be observed:
- **Maximum rotational speed:**
  This is determined by the largest pump stage used.
- **Pressures:**
  These are restricted by the maximum transmissible torques of the drive shaft, the through drive and the driver.

Addition of drive torques
Please note, that in multiple pump arrangements the drive torques of the single pumps stages will add up according to the following formula:

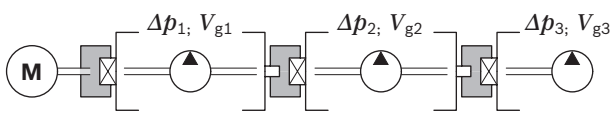

$$\frac{\Delta p_1 \times V_{g1} + \Delta p_2 \times V_{g2} + \Delta p_3 \times V_{g3}}{18 \times \pi} \leq M_{max}\ ^{1)}$$

Δp [bar]
V_g [cm³]

[1] M_{max}: see table above "Maximum transferable drive torques"

This may result in pressure restrictions for the respective pump stages.

Standard through drive (tang drive coupling)
In the case of AZPS pumps the driver for the following pump stage can carry a load of up to M_{max} = 65 Nm (AZPS-1x) resp. M_{max} = 85 Nm (AZPS-2x).
Please note possibly resulting pressure restrictions for the following pump stages. Subsequent pumps of a smaller series determine the max. transmissible torque.

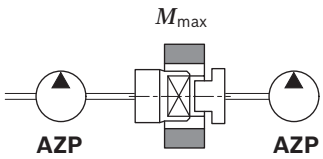

Following pump		M_{max} [Nm]
Platform F	AZPF-1x	65
	AZPF-2x	85
	AZPS-1x	65
	AZPS-2x	85
	AZPJ	65
Platform B	AZPB-3x	25

Reinforced through drives
For applications with higher transfer torques or torsional vibrations reinforced through drives up to M_{max} = 160 Nm are available. Lay out design on request.

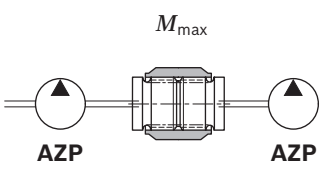

Diagrams/characteristic curves

Flow characteristic curves

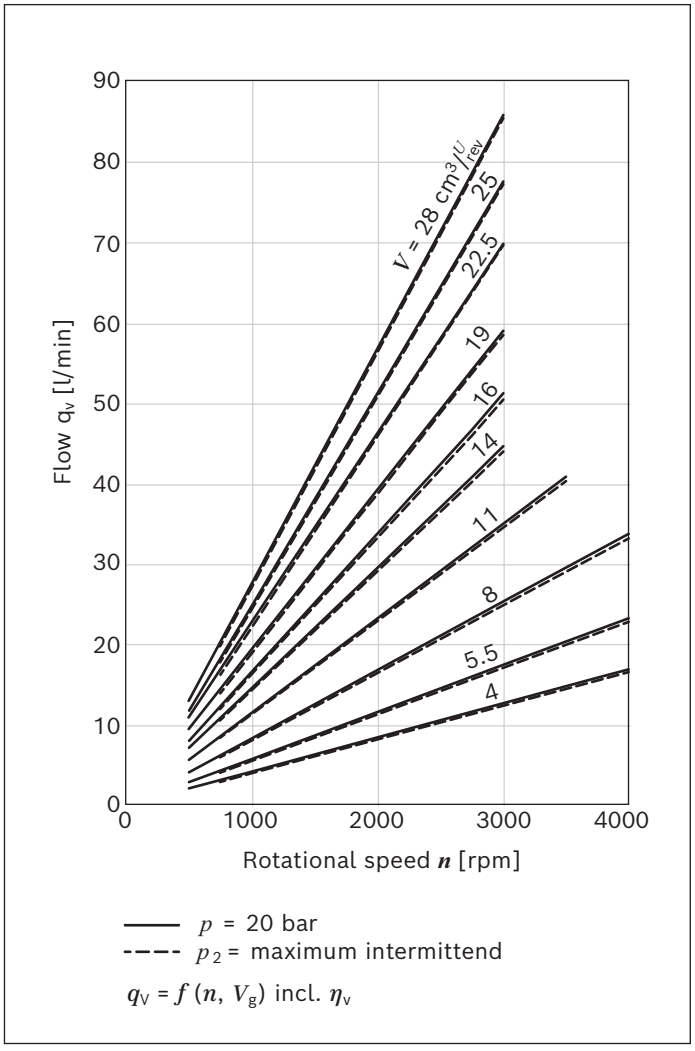

Note

- Characteristic curves measured at ν = 32 mm²/s and t = 50 °C.

Power diagrams

Size 4

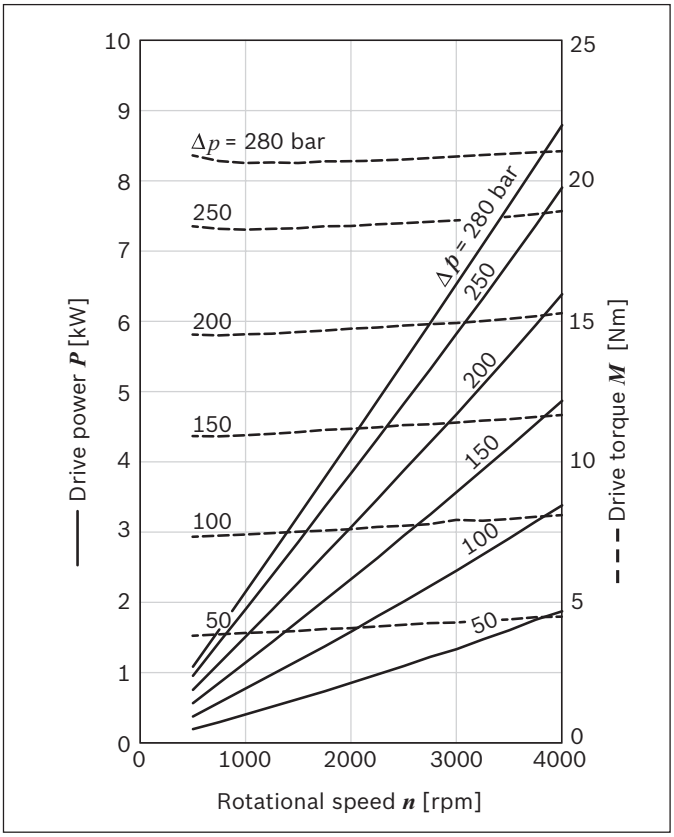

Size 5

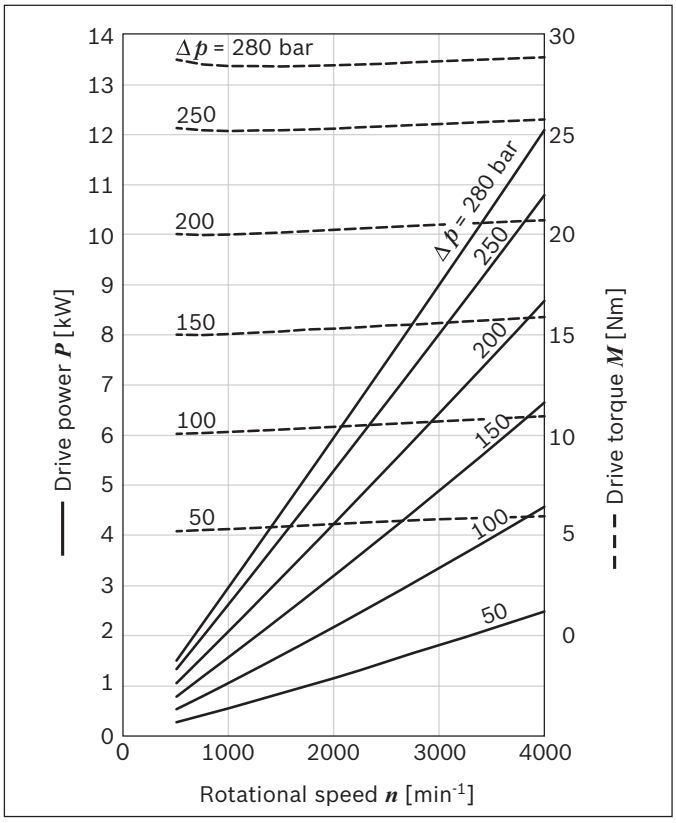

Size 8

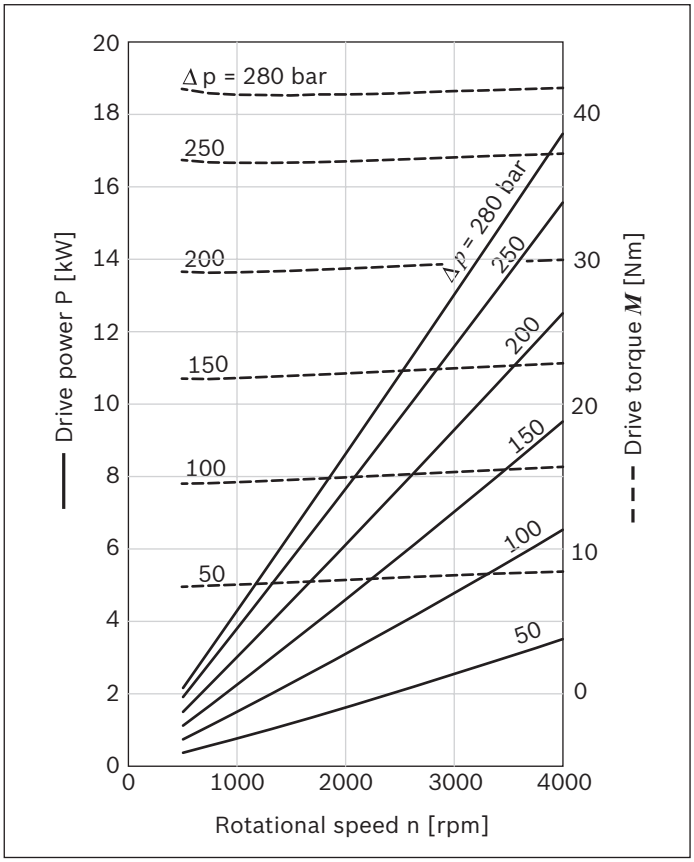

Size 11

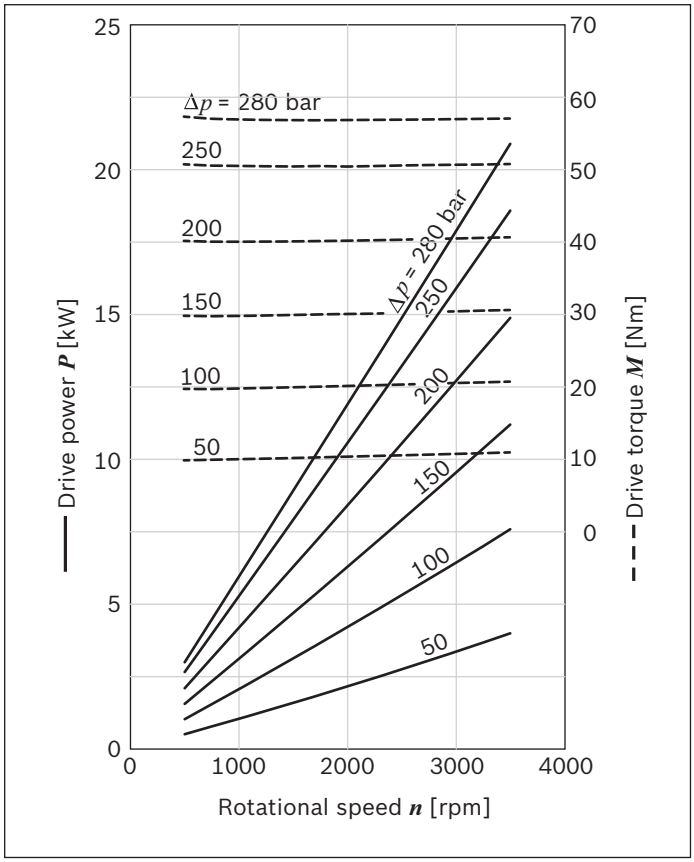

Size 14

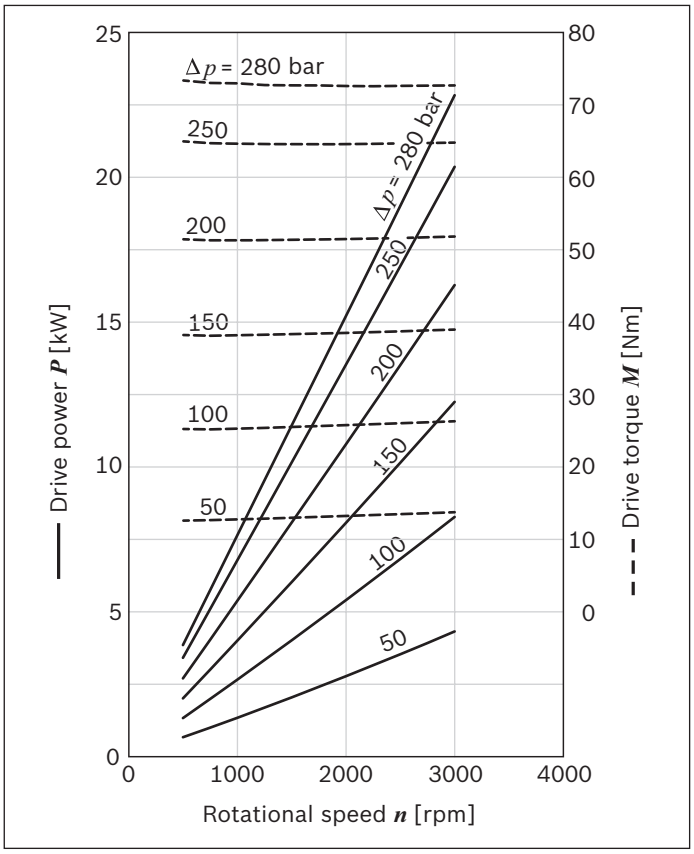

Size 16

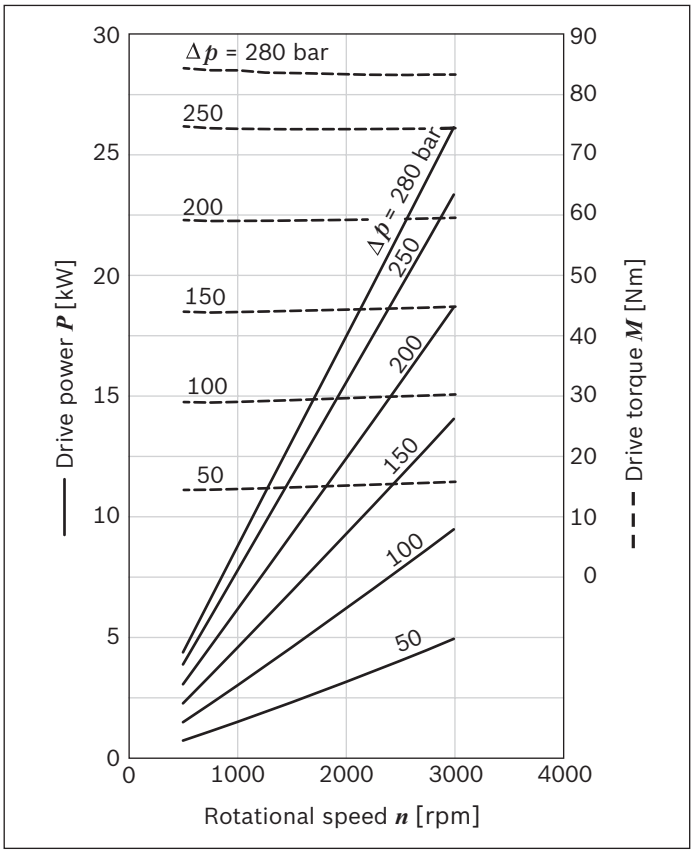

Size 19

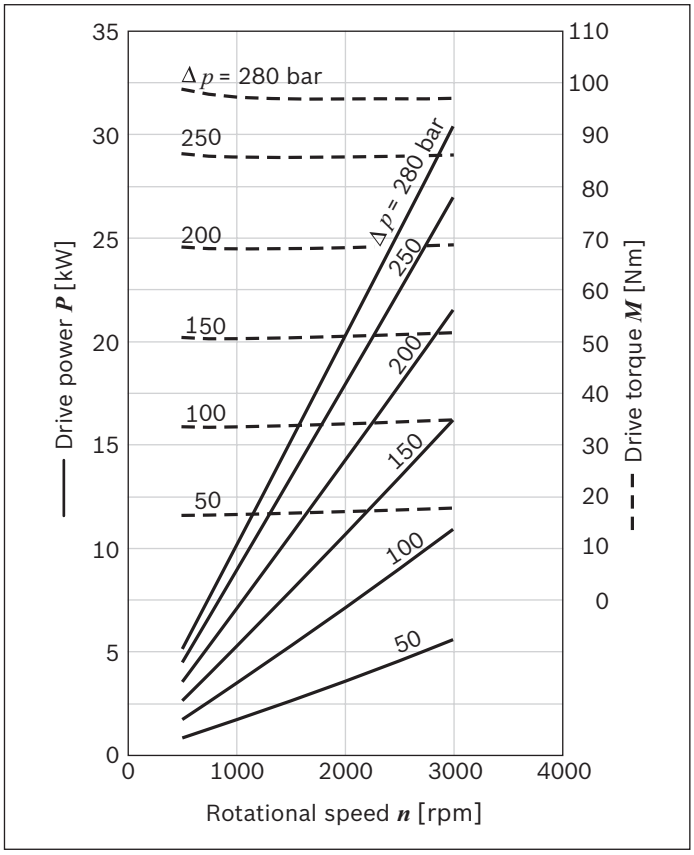

Size 22

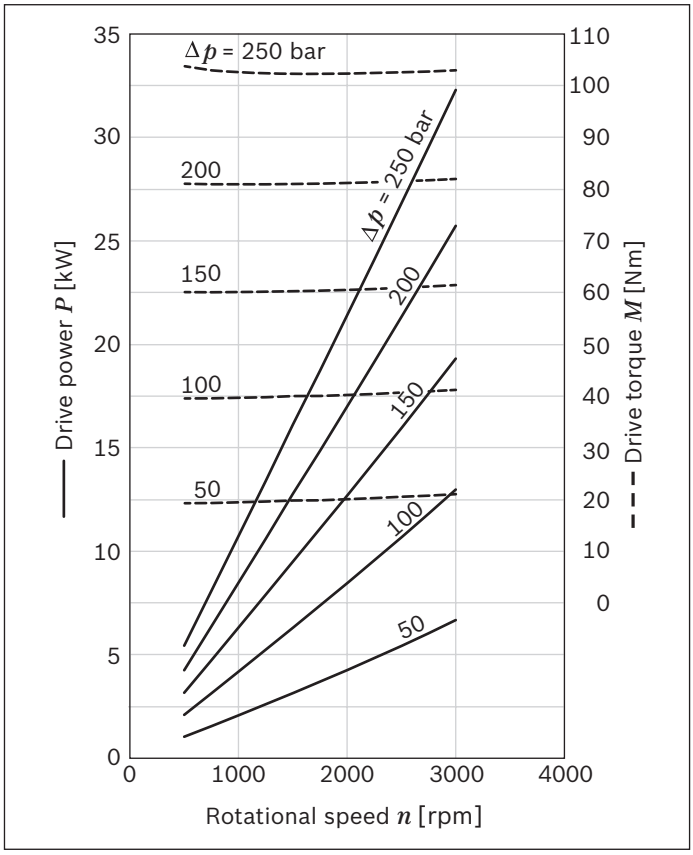

Size 25

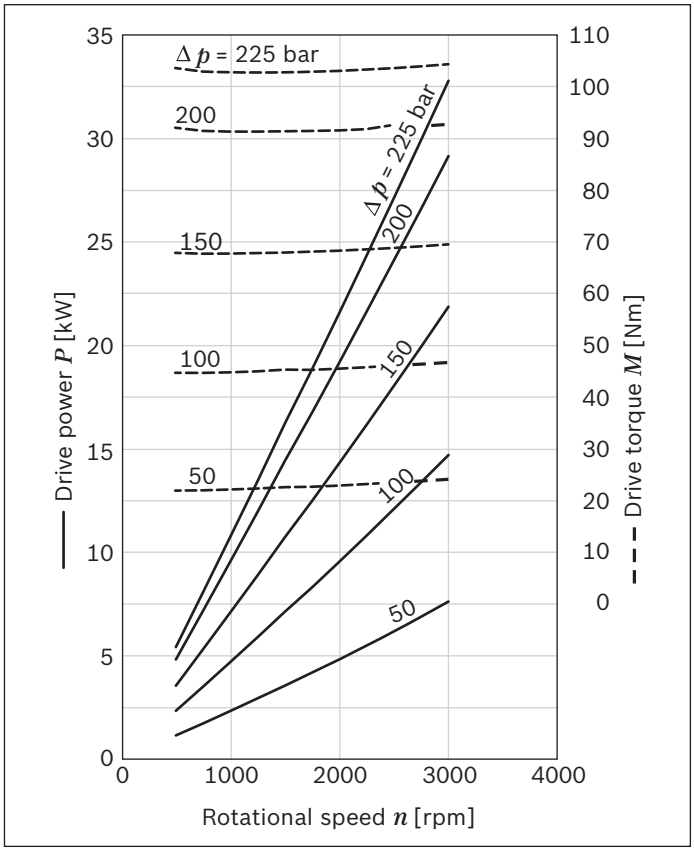

Size 28

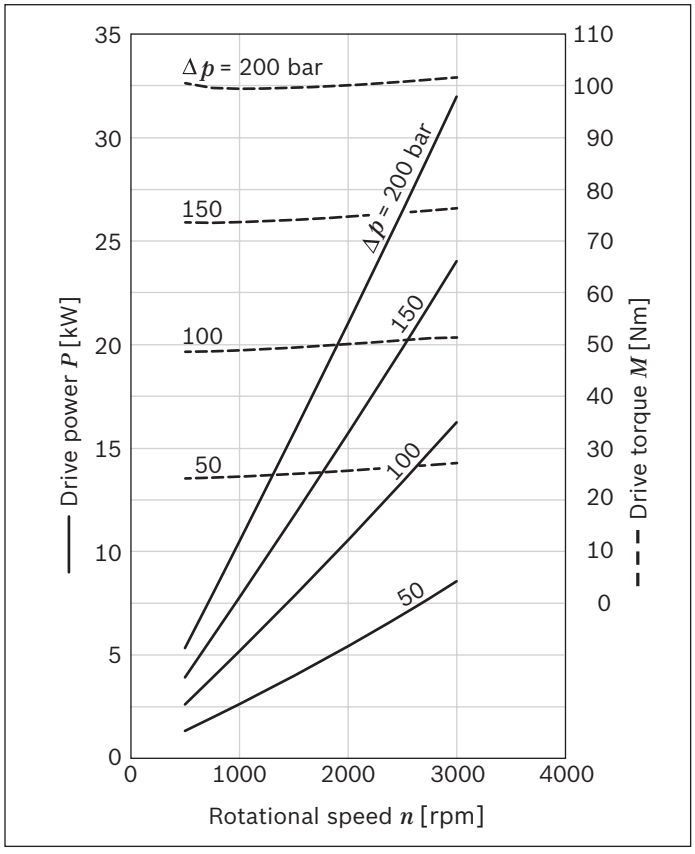

Noise charts

Noise levels dependent on the rotational speed, pressure range between 10 bar and pressure value p_2 (see chapter "Technical data").
These are typical characteristic values for the respective size. They describe the airborne sound emitted solely by the pump.
Ambient influences (installation site, piping, other system components) were not taken into account.
The values refer to one individual pump.

Note

- Characteristic curves measured at ν = 32 mm²/s and t = 50 °C.
- Sound pressure level calculated from noise measurements made in the low reflection measuring room according to DIN 45635, Part 26.
- Distance from measuring sensor to pump: 1 m.

Size 4

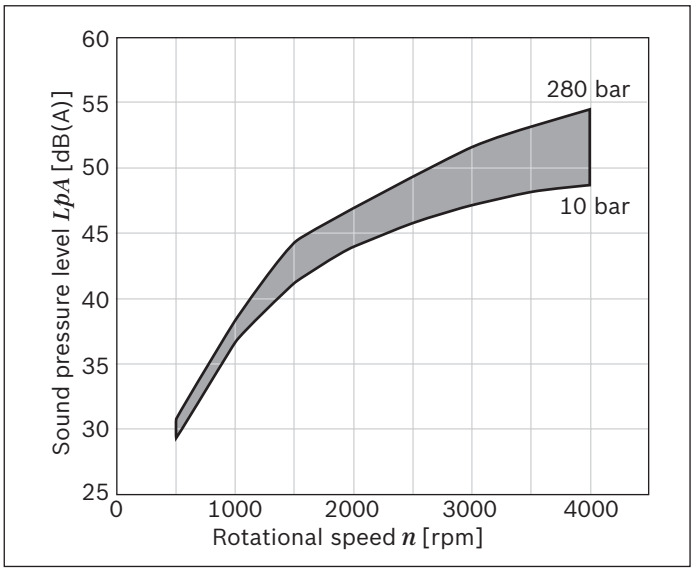

Size 5

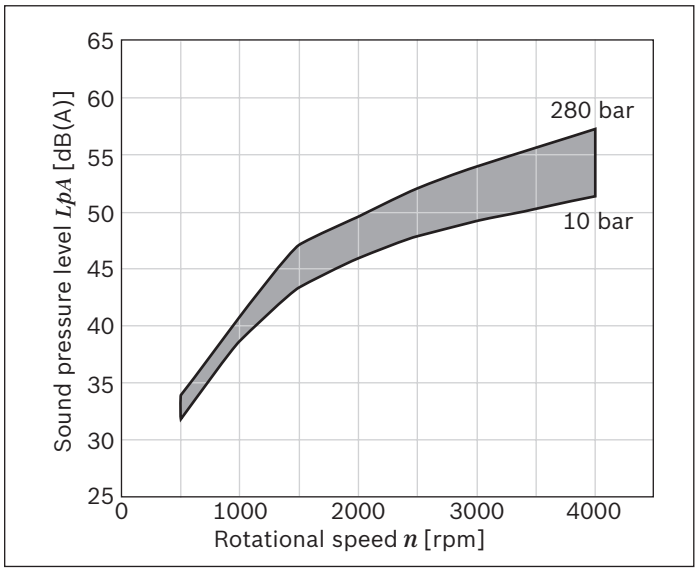

Size 8

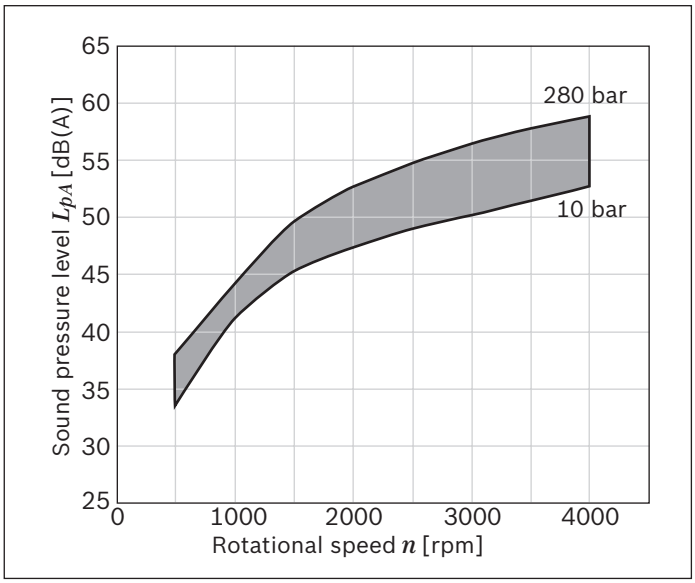

Size 11

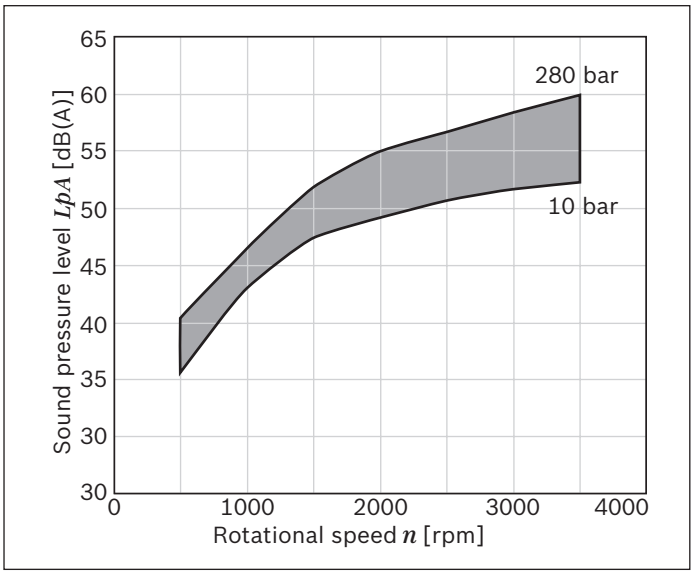

Size 14

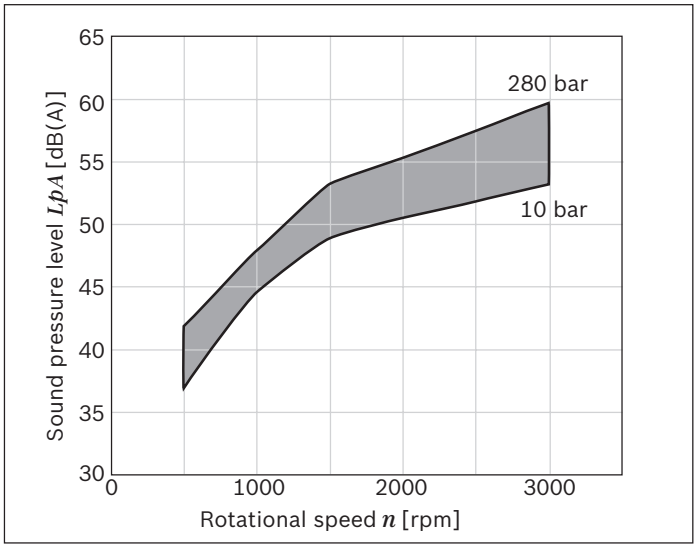

Size 16

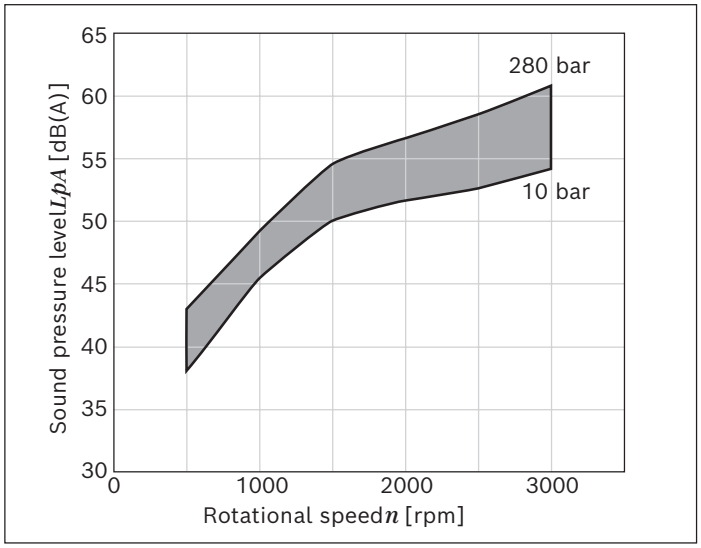

Size 19

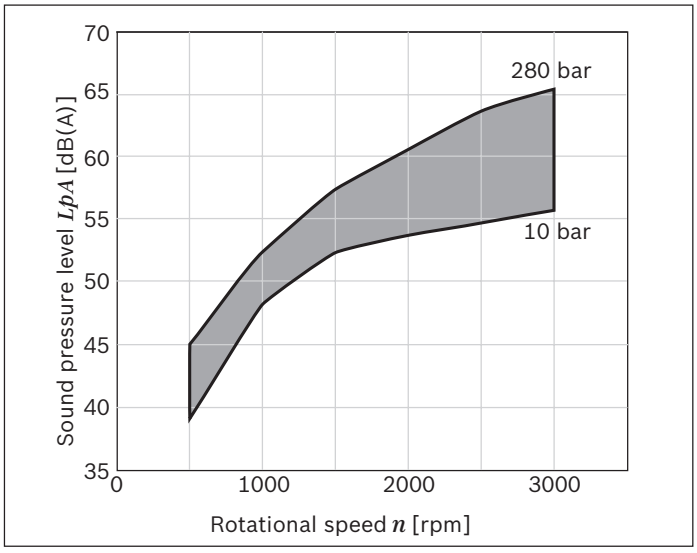

Size 22

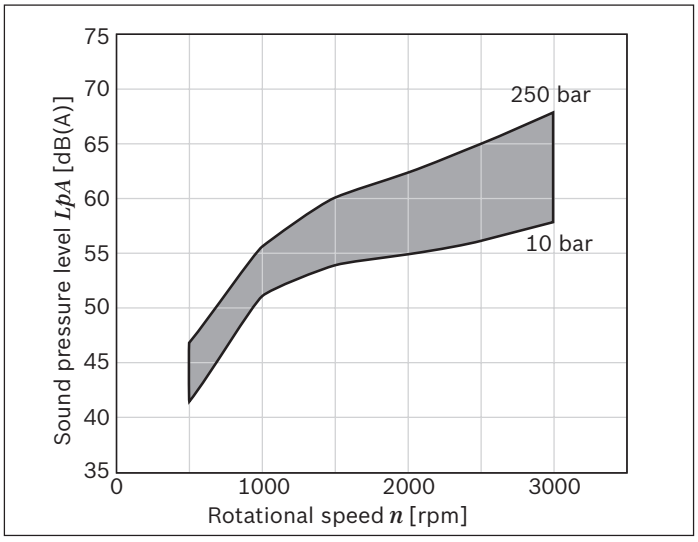

Size 25

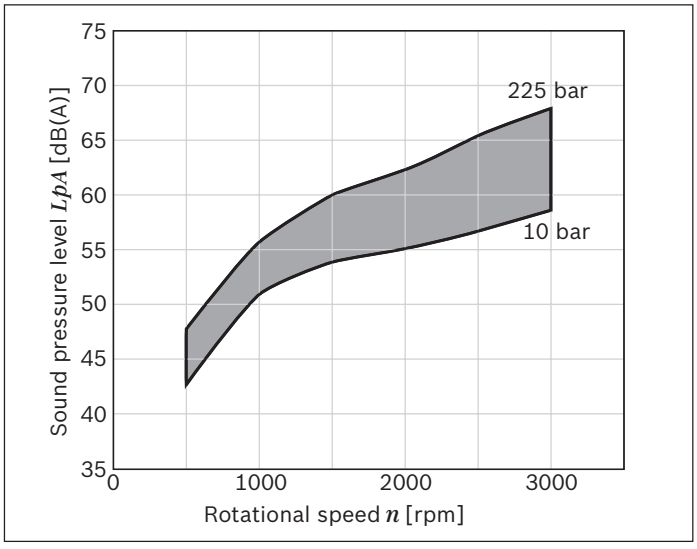

Size 28

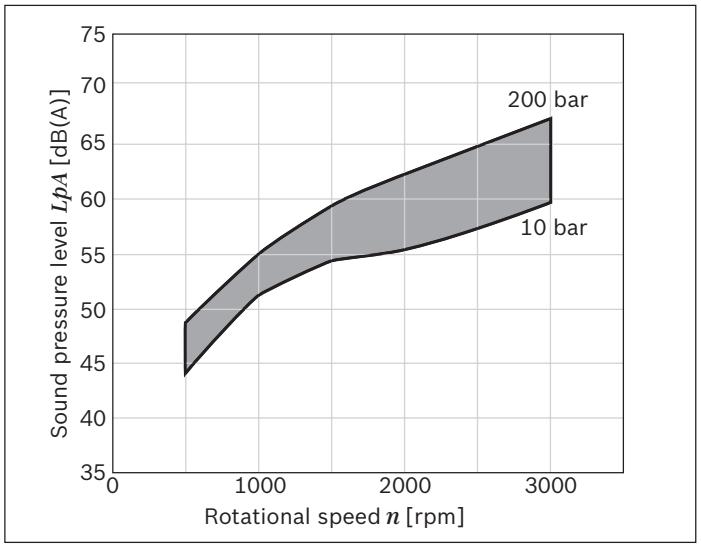

Dimensions

Drive shafts

Tapered shaft 1:5
(for front cover B, P, N)

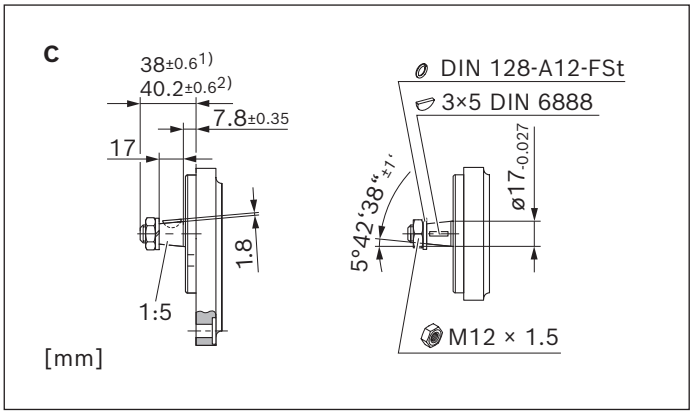

1) In combination with front cover B
2) In combination with front cover P

Tapered shaft 1:5
(for outrigger bearing A, G)

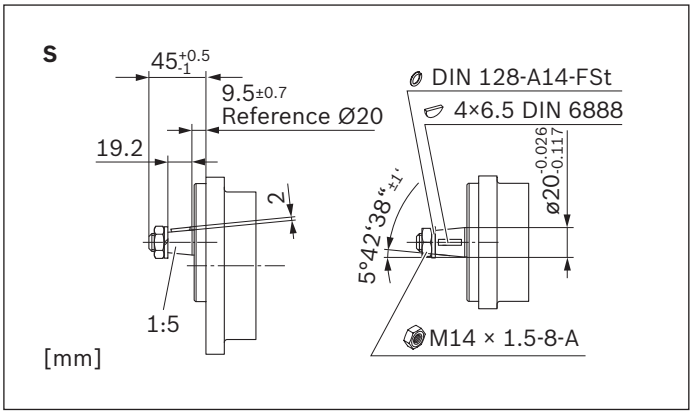

Tapered shaft 1:8

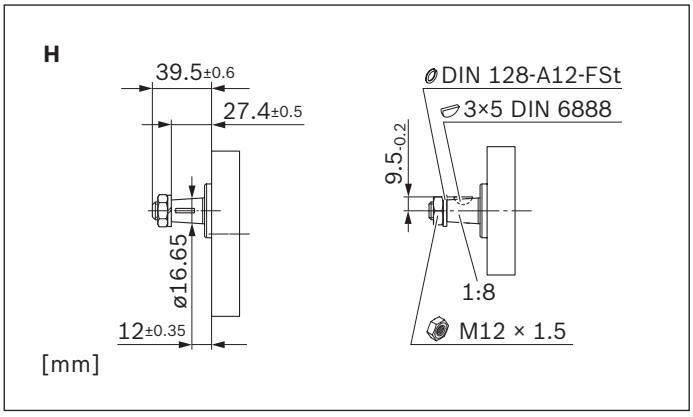

Splined shaft (SAE J744 16-4 9T)

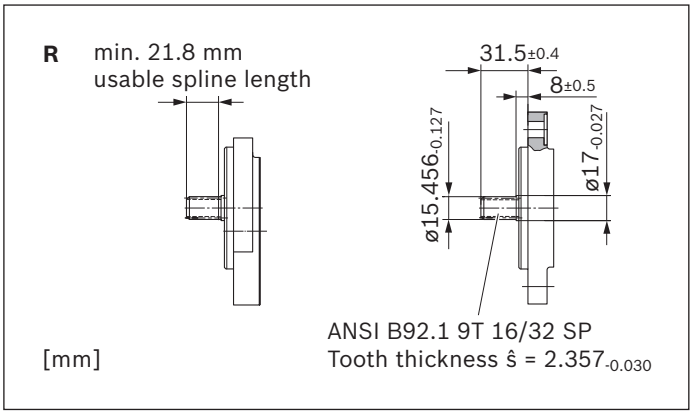

Splined shaft (SAE J744 19-4 11T)

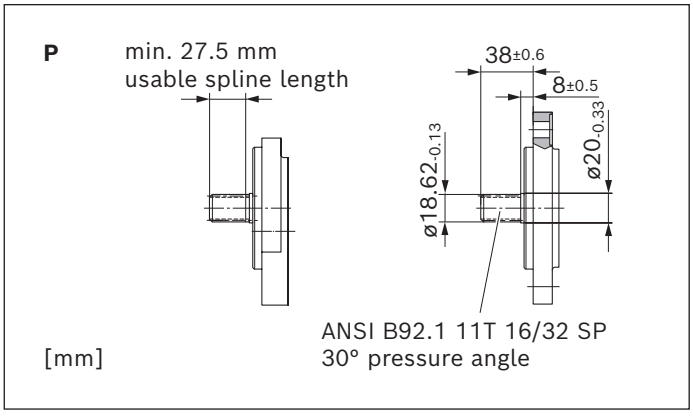

Splined shaft (DIN 5482 B17 x 14)

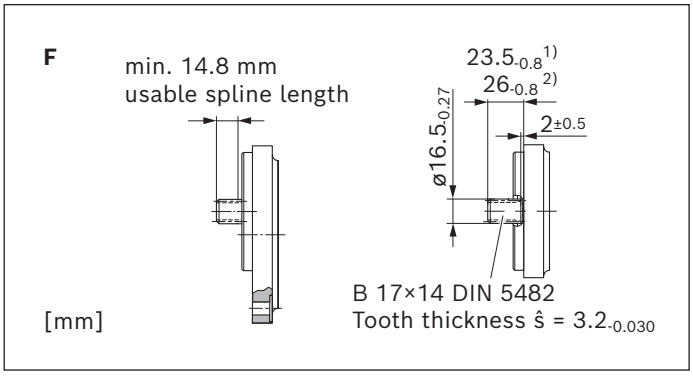

1) In combination with front cover B
2) In combination with front cover P

Tang drive

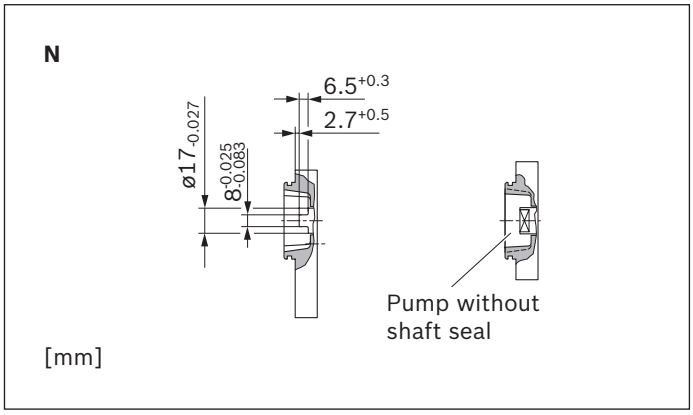

Parallel keyed shaft (SAE J744 16-1 A)

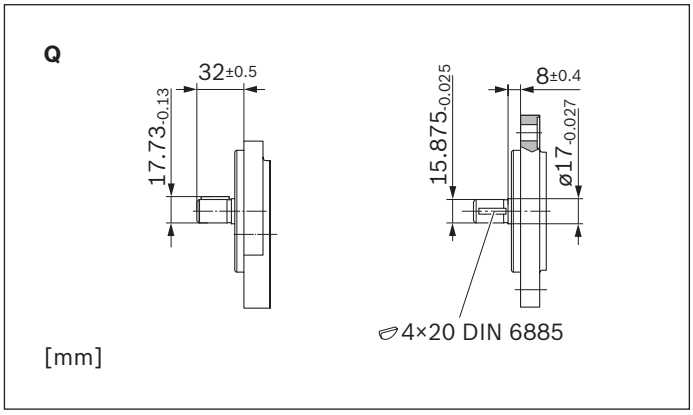

Front cover

Rectangular flange Ø80 mm

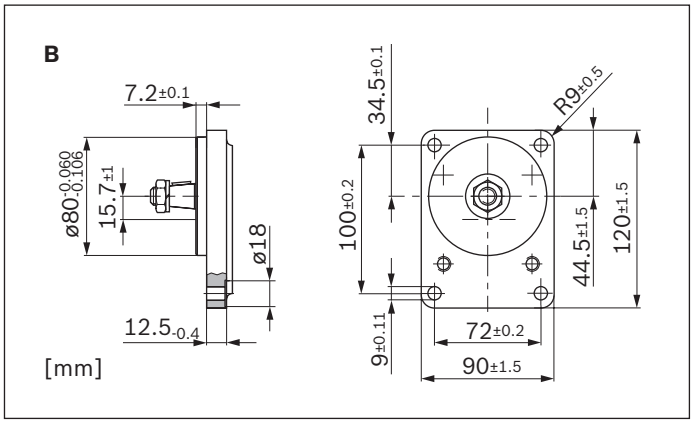

Rectangular flange Ø36.47mm

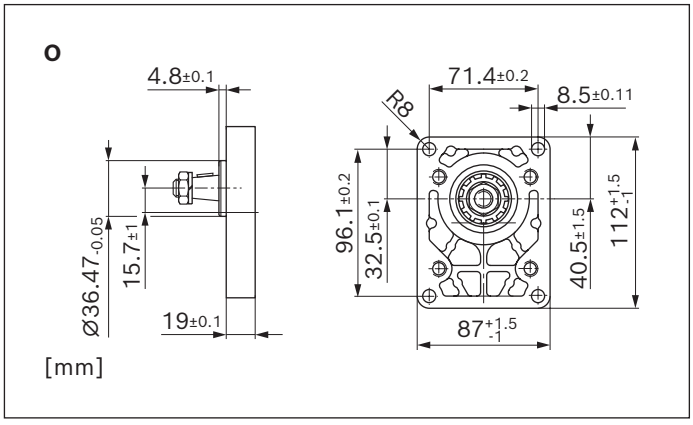

2-bolt flange Ø82.55 mm, SAE J744 82-2 (A)

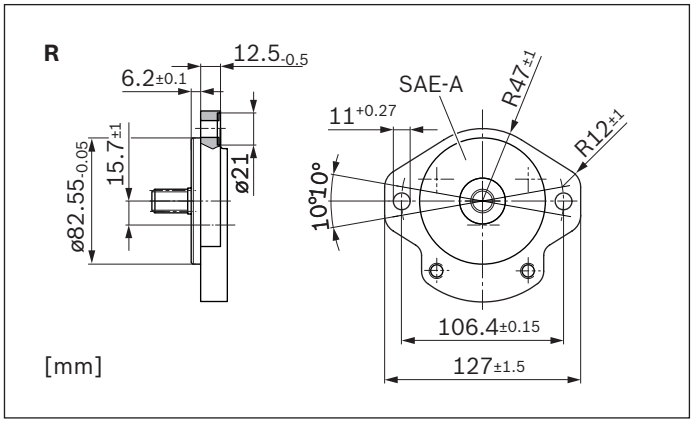

2-bolt flange Ø101.6mm, SAE J744 101-2 (B)

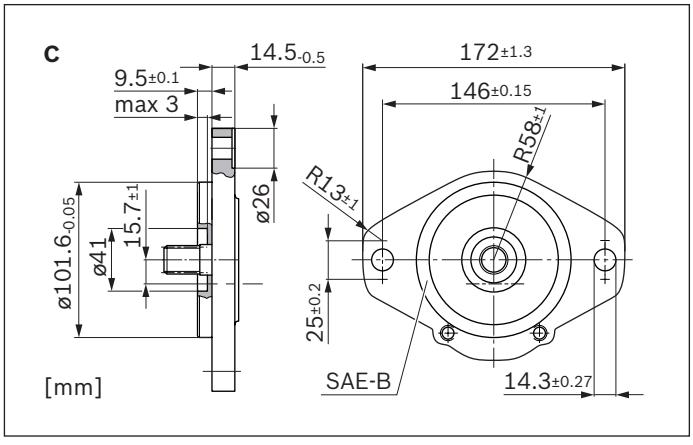

2-bolt mounting Ø52mm, with O-ring

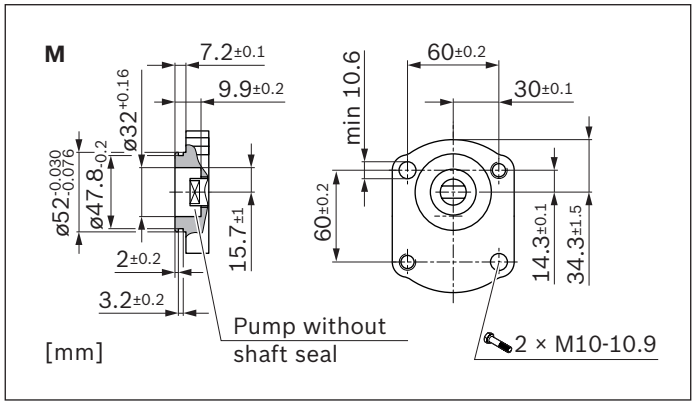

2-bolt mounting Ø50mm, connection variant P

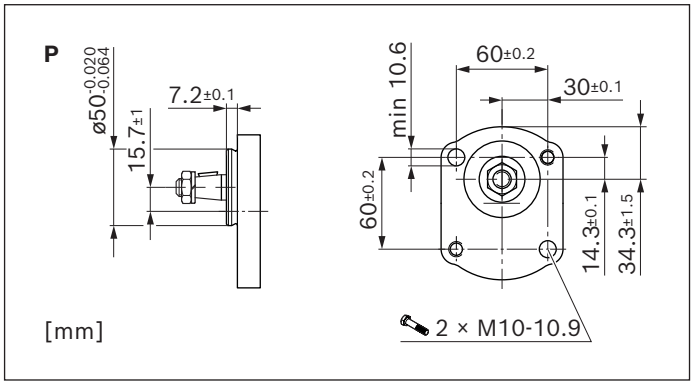

4-bolt mounting Ø52 mm, with O-ring

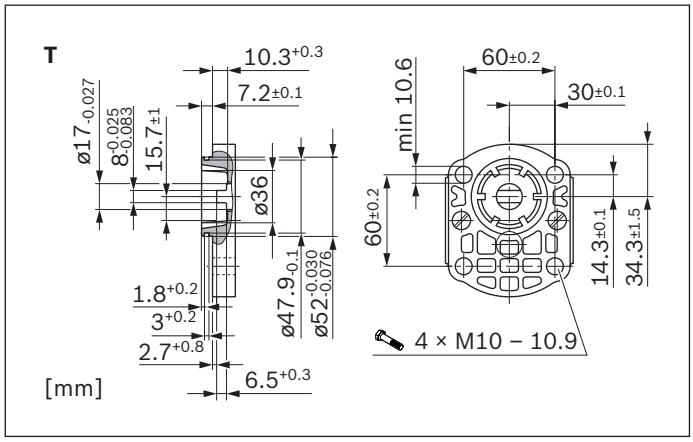

Outrigger bearing Ø80 mm, type 1

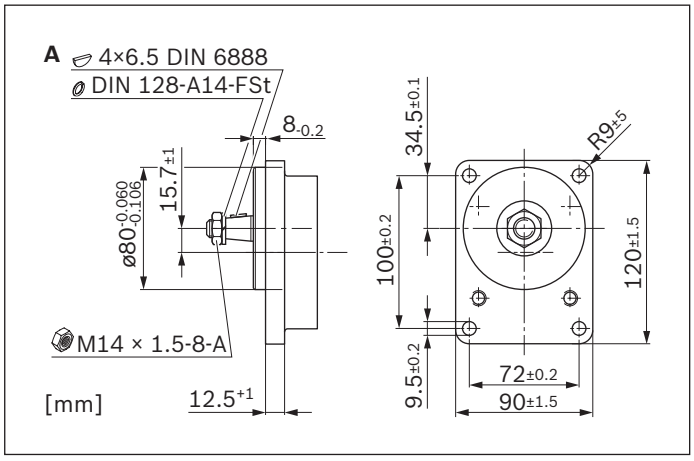

Line connections

Pipe thread according to ISO 228-1

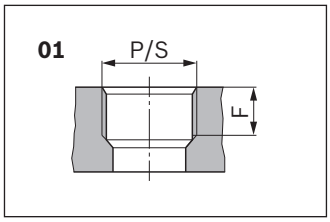

NG	Pressure side		Suction side	
	P	F	S	F
		mm		mm
4 ... 16	G 1/2	16	G 3/4	16
19 ... 28	G 3/4		G 1	19

Metric threads according to ISO 6149, O-ring

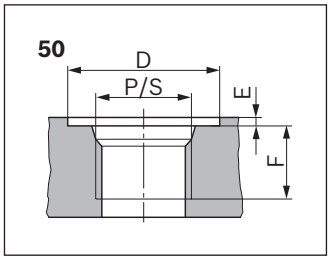

NG	Pressure side				Suction side			
	P	D	E	F	S	D	E	F
		mm	mm	mm		mm	mm	mm
4 ... 5	M18 × 1.5	29	0,5	16	M18 × 1.5	29	0,5	16
8 ... 16	M22 × 1.5	34		18	M27 × 2	40		19
19 ... 28					M33 × 2	46		22

UN-thread according to ISO 11926-1 / ASME B 1.1, O-ring

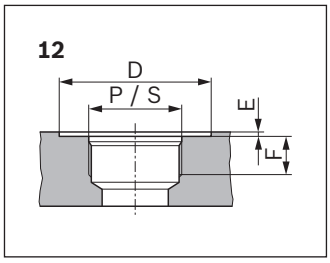

NG	Pressure side				Suction side			
	P	D	E	F	S	D	E	F
		mm	mm	mm		mm	mm	mm
4 ... 5	9/16-18 UNF-2B	25	0,5	14	9/16-18 UNF-2B	25	0,5	14
8	7/8-14 UNF-2B	35		17	7/8-14 UNF-2B	35		17
11 ... 28					1 1/16-12 UN-2B	45		19

Square flange

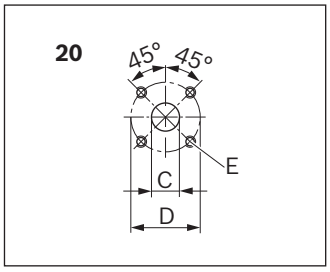

NG	Pressure side			Suction side		
	C	D	E	C	D	E
	mm	mm		mm	mm	
4 ... 5	15	35	M6; 13 mm deep	15	40	M6; 13 mm deep
8 ... 16				20		
19 ... 28 [1]				26	55	M8; 13 mm deep

[1] Series 2x

Square flange

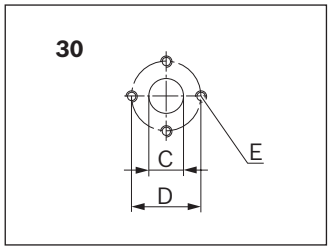

NG	Pressure side			Suction side		
	C	D	E	C	D	E
	mm	mm		mm	mm	
4 ... 8	13,5	30,2	M6; 13 mm deep	13,5	30,2	M6; 13 mm deep
11 ... 28				20	39,7	M8; 13 mm deep

Note
Depending on the design variant, the size of the threaded connections may differ from the sizes specified in the table. See information in the dimensional drawings.

Preferred program

Tang drive with 2-bolt mounting Ø52 mm

AZPS – XX – ... **NM20**MB

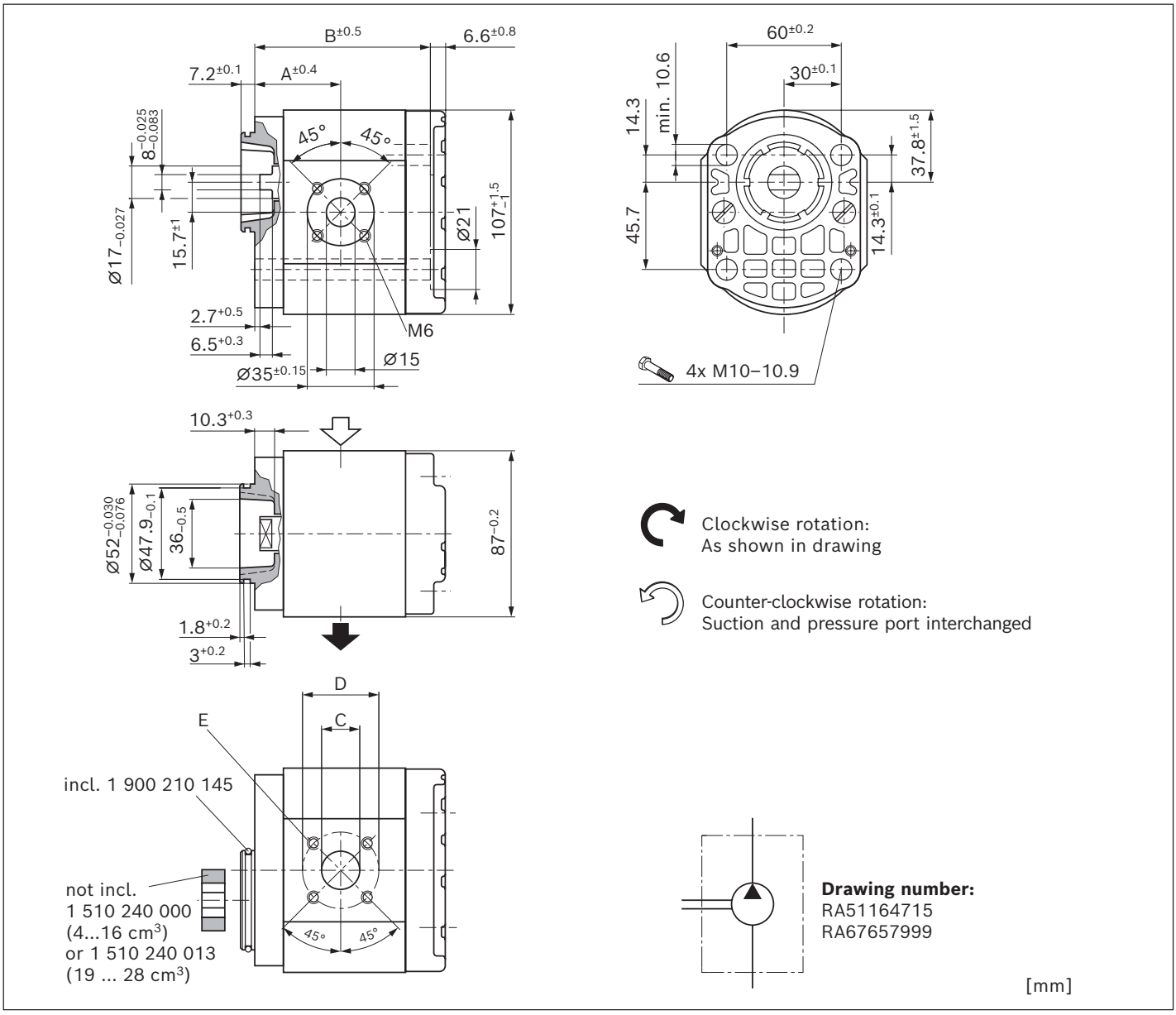

NG	Material number		Maximum pressure intermittend	Maximum speed	Weight	Dimensions				
	Direction of rotation		p_2	n_{max}	m	A	B	C	D	E
	counter-clockwise	clockwise	bar	rpm	kg	mm	mm	mm	mm	
4	0 517 215 301	0 517 215 001	280	4000	2.15	37.4	73.7	15	40	M6; 13 mm deep
5	0 517 315 301	0 517 315 001	280	4000	2.2	38.6	76.2	15	40	
8	0 517 415 301	0 517 415 001	280	4000	2.3	40.7	80.3	20	40	
11	0 517 515 302	0 517 515 001	280	3500	2.4	44.5	85.3	20	40	
14	0 517 515 303	0 517 515 002	280	3000	2.55	45	90.3	20	40	
16	0 517 615 301	0 517 615 001	230	3000	2.6	45	93.7	20	40	
19	0 517 615 302	0 517 615 002	250	3500	3	55.8	110.7	26	55	M8; 13 mm deep
22,5	0 517 715 301	0 517 715 001	210	3500	3.2	58.5	116.1	26	55	
25	0 517 715 302	0 517 715 002	190	3000	3.3	60.6	120.3	26	55	
28	0 517 715 303	0 517 715 003	170	3000	3.4	63	125.1	26	55	

Tapered shaft 1:5 with 2-bolt mounting Ø50 mm

AZPS – XX – … **CP20**KB – S0007

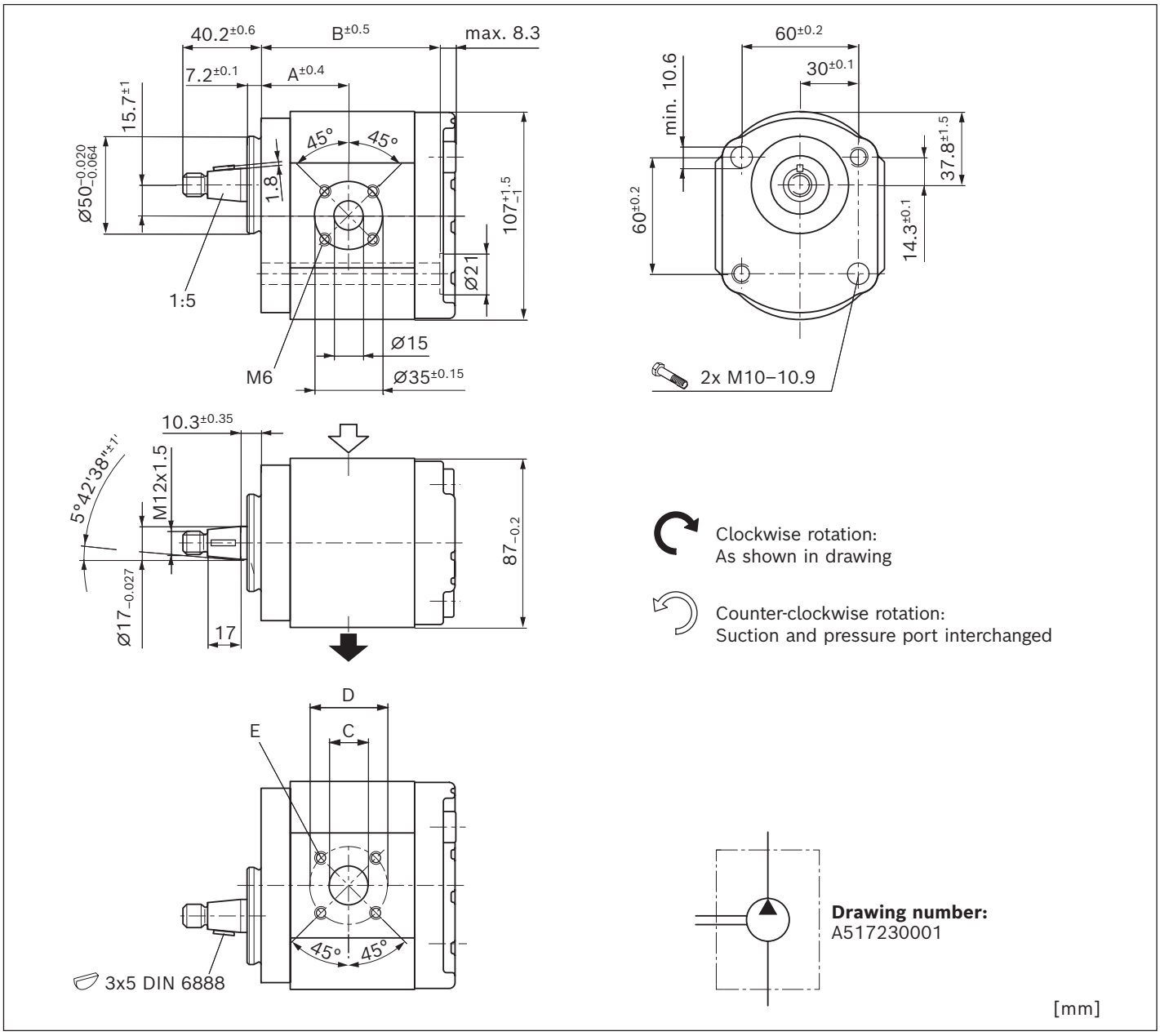

NG	Material number	Maximum pressure intermittend	Maximum speed	Weight	Dimensions				
	Direction of rotation	p_2	n_{max}	m	A	B	C	D	E
	counter-clockwise	bar	rpm	kg	mm	mm	mm	mm	
4		280	4000						
5		280	4000						
8		280	4000						
11	0 517 515 304	280	3500	3.1	44.5	85.3	20	40	M6; 13 mm deep
14	0 517 515 306	280	3000	3.3	45	90.3	20	40	
16	0 517 615 303	280	3000	3.4	45	93.7	20	40	
19		280	3500						
22,5		250	3500						
25		225	3000						
28		200	3000						

Splined shaft (DIN 5482 B17 x 14) with 2-bolt mounting Ø50 mm

AZPS – XX – ... **FN20**KB

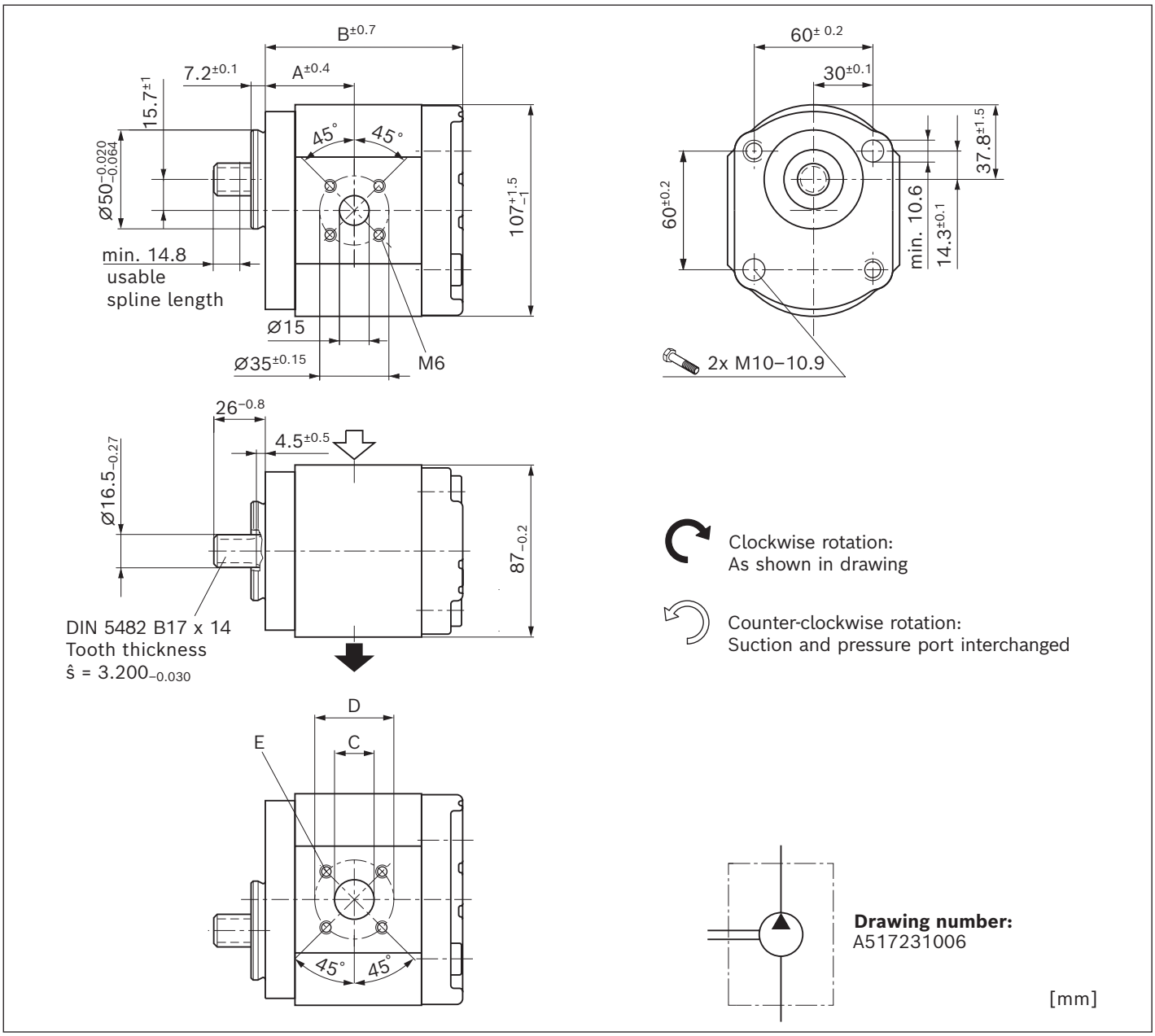

NG	Material number	Maximum pressure intermittend	Maximum speed	Weight	Dimensions				
	Direction of rotation	p_2	n_{max}	m	A	B	C	D	E
	clockwise	bar	rpm	kg	mm	mm	mm	mm	
4		280	4000						
5		280	4000						
8		280	4000						
11		280	3500						M6; 13 mm deep
14		280	3000						
16	0 517 615 003	280	3000	3.3	45	100.5	20	40	
19		280	3500						
22,5		250	3500						
25		225	3000						
28		200	3000						

Tapered shaft 1:5 with rectangular flange Ø80 mm

AZPS – XX – ... **CB20**MB

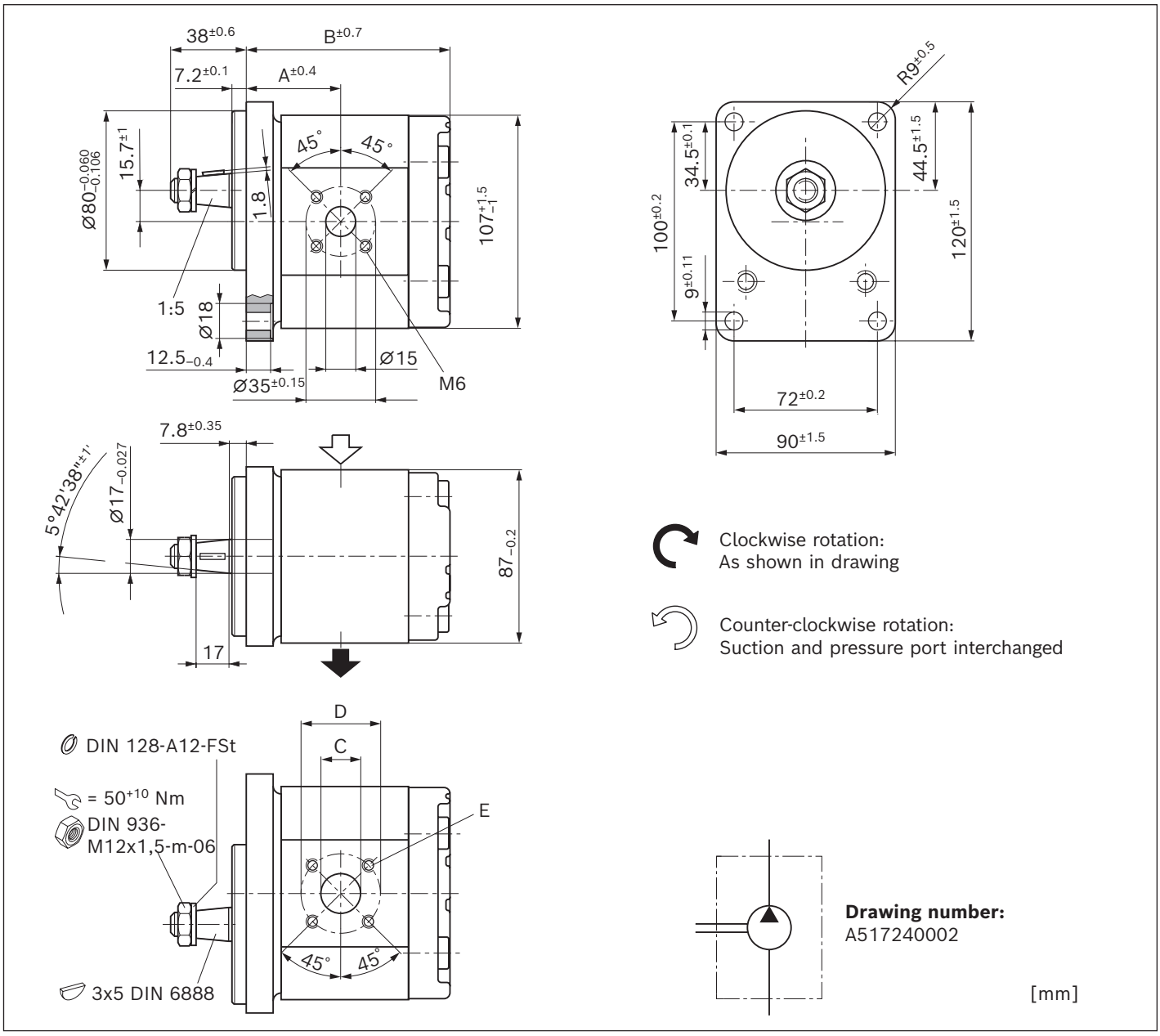

NG	Material number		Maximum pressure intermittend	Maximum speed	Weight	Dimensions				
	Direction of rotation		p_2	n_{max}	m	A	B	C	D	E
	counter-clockwise	clockwise	bar	rpm	kg	mm	mm	mm	mm	
4	0 517 225 301	0 517 225 001	280	4000	3.4	39.9	83	15	40	M6; 13 mm deep
5	0 517 325 301	0 517 325 001	280	4000	3.5	41.1	85.5	15	40	
8	0 517 425 301	0 517 425 001	280	4000	3.6	43.2	89.6	20	40	
11	0 517 525 301	0 517 525 001	280	3500	3.8	47	94.6	20	40	
14	0 517 525 302	0 517 525 002	280	3000	3.9	47.5	99.6	20	40	
16	0 517 625 301	0 517 625 001	280	3000		47.5	103	20	40	
19	0 517 625 302	0 517 625 002	280	3500	4.5	58.3	120	26	55	M8; 13 mm deep
22,5	0 517 725 301	0 517 725 001	250	3500	4.6	61	125.4	26	55	
25	0 517 725 302	0 517 725 002	225	3000	4.8	63.1	129.6	26	55	
28	0 517 725 303	0 517 725 003	200	3000	4.9	65.5	134.4	26	55	

Splined shaft (SAE J744 16-4 9T) with 2-bolt flange Ø82.55 mm, SAE J744 82-2 (A)

AZPS – XX – ... **RR20**MB

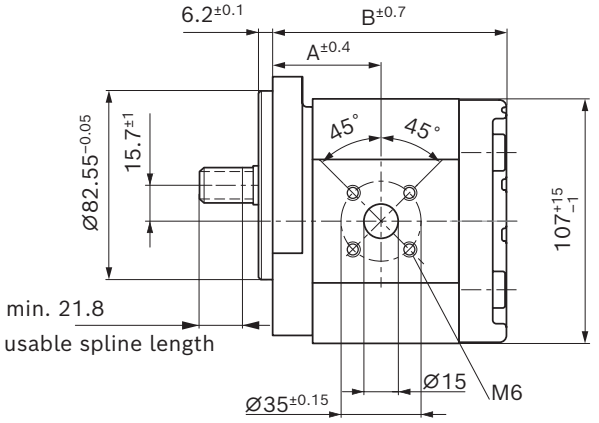

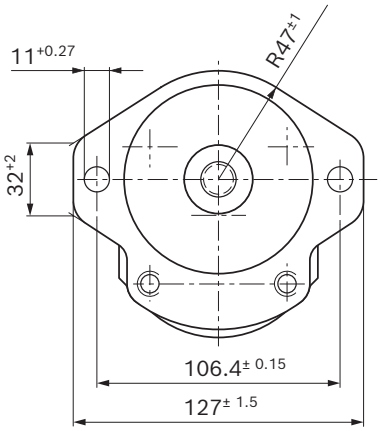

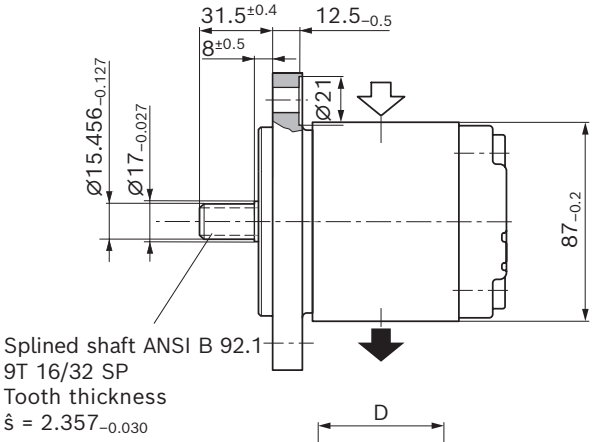

Clockwise rotation:
As shown in drawing

Counter-clockwise rotation:
Suction and pressure port interchanged

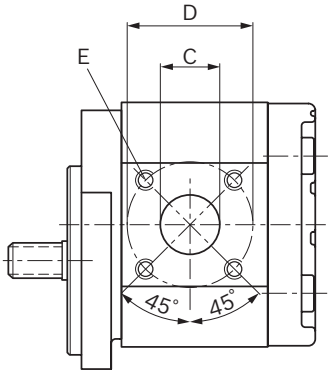

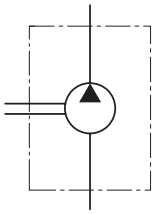

Drawing number:
RA52717713
A517241001

[mm]

NG	Material number		Maximum pressure intermittend	Maximum speed	Weight	Dimensions				
	Direction of rotation		p_2	n_{max}	m	A	B	C	D	E
	counter-clockwise	clockwise	bar	rpm	kg	mm	mm	mm	mm	
4	0 517 225 302	0 517 225 002	280	4000	3.4	39.9	83	15	40	M6; 13 mm deep
5	0 517 325 302	0 517 325 002	280	4000	3.5	41.1	85.5	15	40	
8	0 517 425 302	0 517 425 002	280	4000	3.6	43.2	89.6	20	40	
11	0 517 525 303	0 517 525 003	280	3500	3.7	47	94.6	20	40	
14	0 517 525 304	0 517 525 004	280	3000	3.9	47.5	99.6	20	40	
16	0 517 625 303 [1]	0 517 625 003	280	3000	3.9	47.5	103	20	40	
19	0 517 625 304	0 517 625 004	280	3500	4.4	58.3	120	26	55	M8; 13 mm deep
22,5	0 517 725 304	0 517 725 004	250	3500	4.6	61	125.4	26	55	
25	0 517 725 305	0 517 725 005	225	3000	4.7	63.1	129.6	26	55	
28	0 517 725 306	0 517 725 006 [1]	200	3000	4.8	65.5	134.4	26	55	

[1] AZPS – 1X – 0 1 6 L RR20PB

Parallel keyed shaft (SAE J744 16-1 A) with 2-bolt flange Ø82.55 mm, SAE J744 82-2 (A)

AZPS – XX – ... **QR12**MB

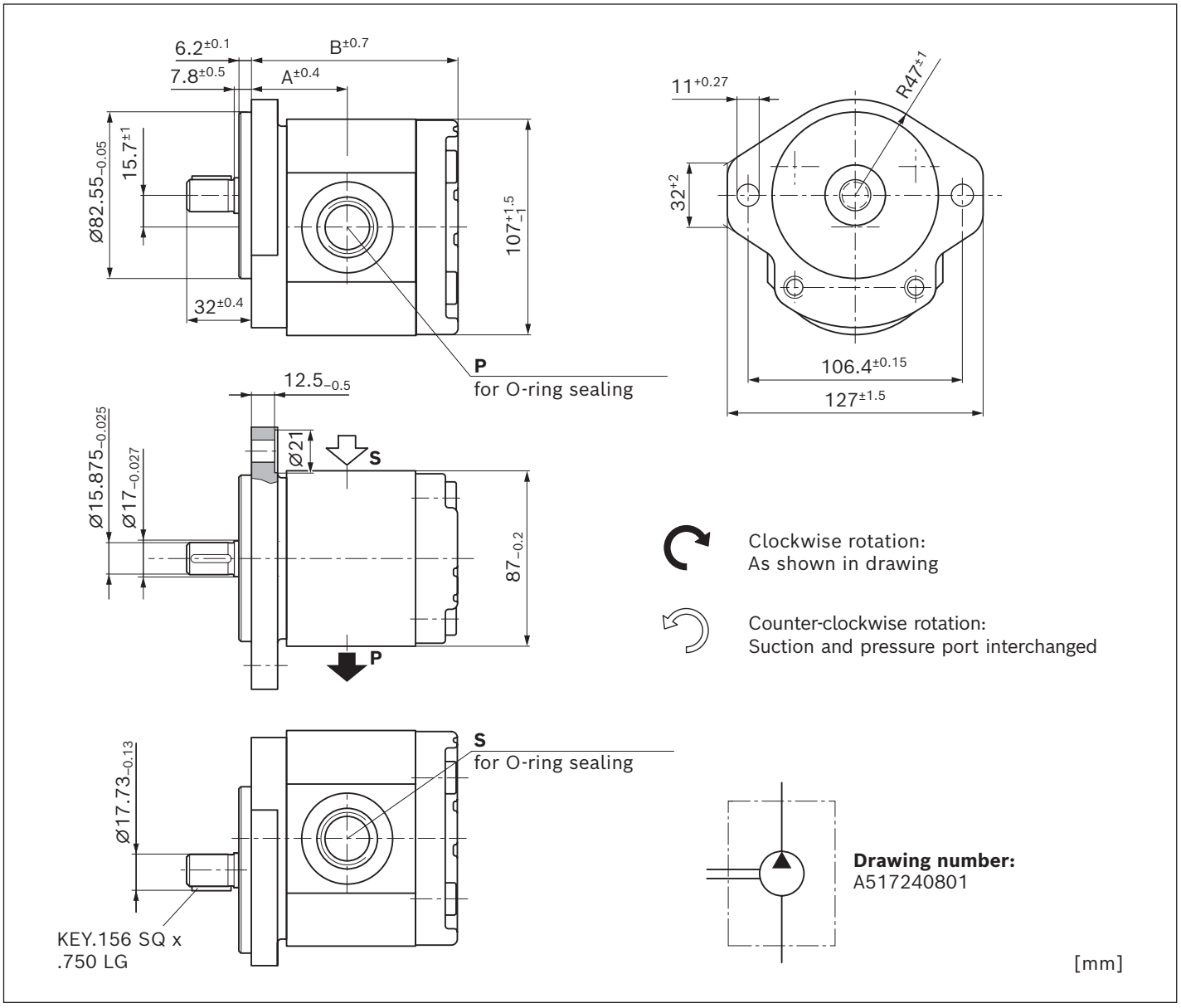

NG	Material number	Maximum pressure intermittend	Maximum speed	Weight	Dimensions			
	Direction of rotation	p_2	n_{max}	m	A	B	S	P
	clockwise	bar	rpm	kg	mm	mm		
4		260	4000					
5		260	4000					
8	0 517 425 003	260	4000	3.6	43.2	89.6	7/8-14 UNF-2B; 16 mm deep	7/8-14 UNF-2B; 16 mm deep
11		260	3500					
14		230	3000					
16		200	3000					
19		210	3500					
22,5		180	3500					
25		160	3000					
28		140	3000					

Splined shaft (SAE J744 16-4 9T) with 2-bolt flange Ø101,6 mm

AZPS – XX – … **RC20**KB

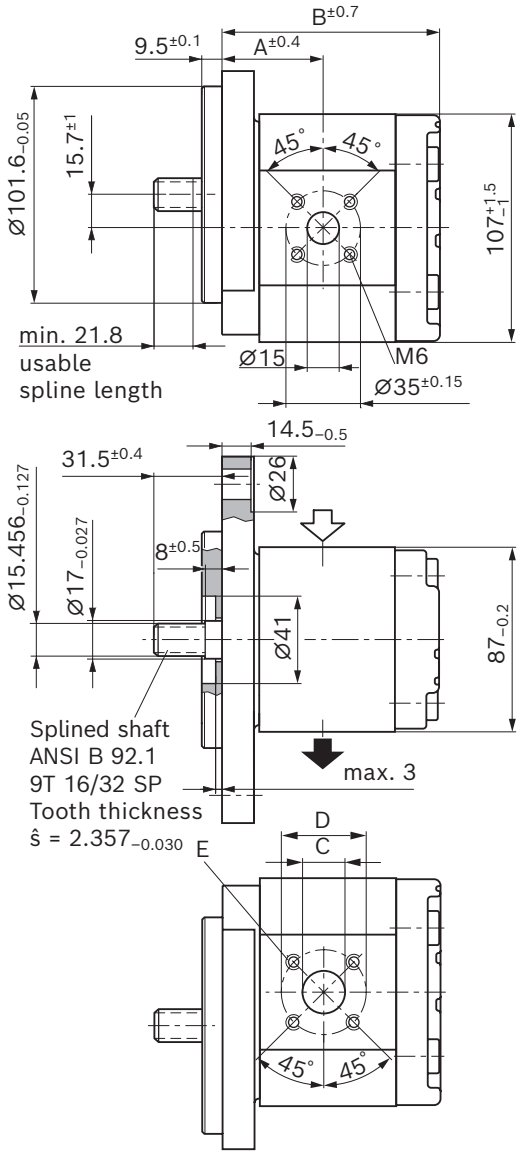

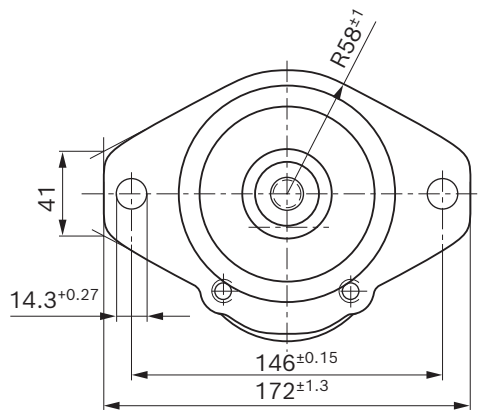

Clockwise rotation:
As shown in drawing

Counter-clockwise rotation:
Suction and pressure port interchanged

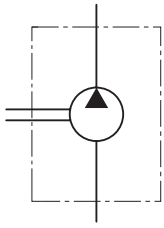

Drawing number:
A517241048

[mm]

NG	Material number		Maximum pressure intermittend	Maximum speed	Weight	Dimensions				
	Direction of rotation		p_2	n_{max}	m	A	B	C	D	E
	counter-clockwise	clockwise	bar	rpm	kg	mm	mm	mm	mm	
4			280	4000						
5			280	4000						
8			280	4000						
11	0 517 525 306		280	3500	4.3	47	95.2	20	40	M6; 13 mm deep
14			280	3000						
16			280	3000						
19			280	3500						
22,5			250	3500						
25		0 517 725 008	225	3000	5.2	63.1	130.2	26	55	M8; 13 mm deep
28			200	3000						

Tapered shaft 1:5 with rectangular flange Ø80 mm

AZPSS – XX – ... **CB2020**MB

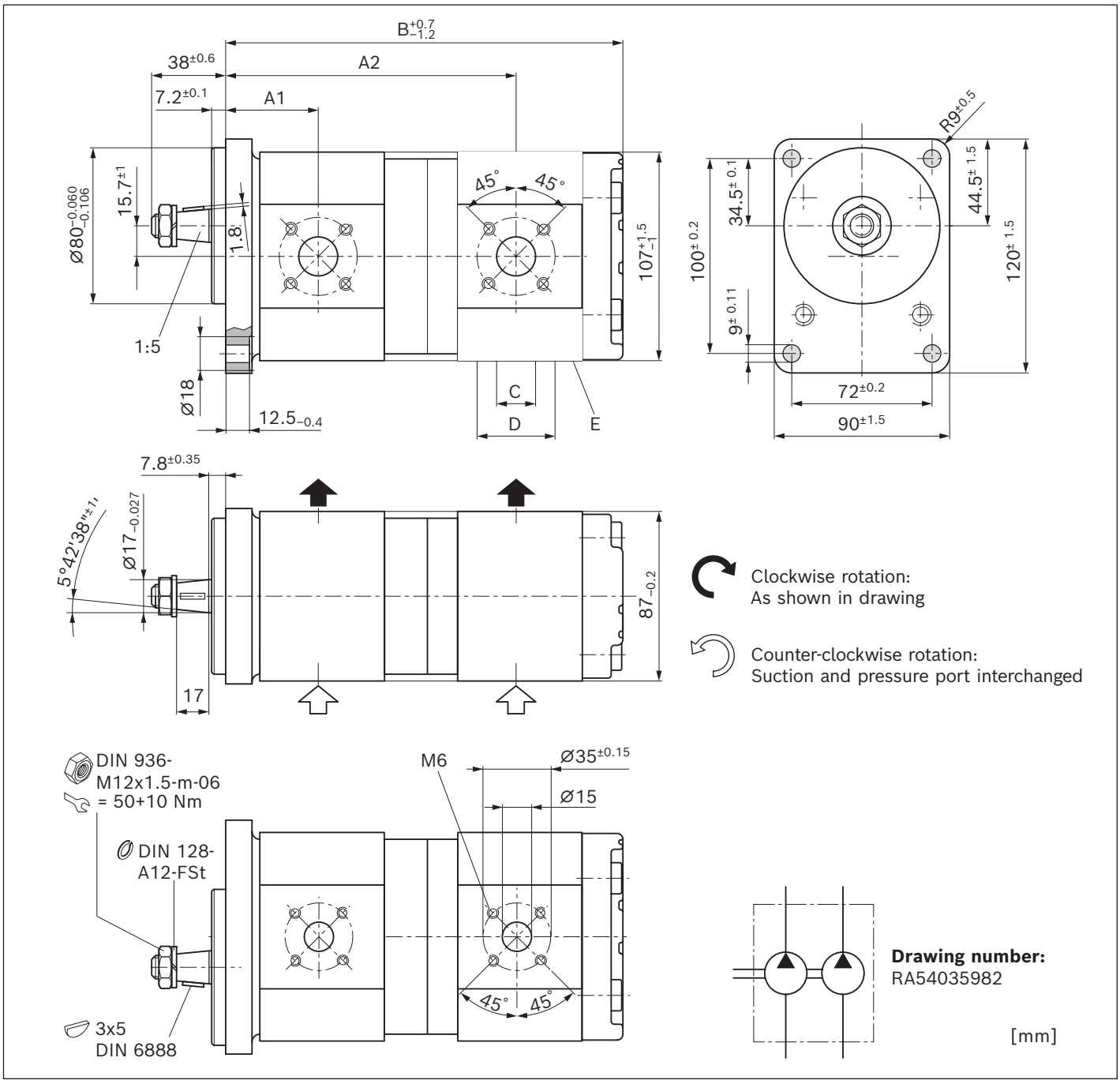

NG		Material number		Max. pressure intermittend		Maximum speed	Weight	Dimensions					
P_I	P_{II}	Direction of rotation		$p_{2\,I}$	$p_{2\,II}$	n_{max}	m	A_1	A_2	B	C [1]	D	E
		counter-clockwise	clockwise	bar	bar	rpm	kg	mm	mm	mm	mm	mm	
5	4		0 517 365 001	280	280	4000		41.1	124.2	167	20	40	M6; 13 mm deep
14	11		0 517 565 011	280	260	3000	5.9	47.5	145.3	192.5	20	40	
16	5	0 517 665 304	0 517 665 018	280	280	3000	5.8	47.5	142.8	187	20	40	
16	8		0 517 665 026	280	280	3000		47.5	144.9	191.2			
16	11	0 517 665 305		280	280	3000	6.1	47.5	148.7	196.3	20	40	
16	16	0 517 665 310		280	230	3000		47.5	149.2	204.5	20	40	

[1] At pump section with size 4 and 5: C = 15 mm

Splined shaft (SAE J744 16-4 9T) with 2-bolt flange Ø82.55 mm, SAE J744 82-2 (A)

AZPSS – XX – ... **RR2020**MB

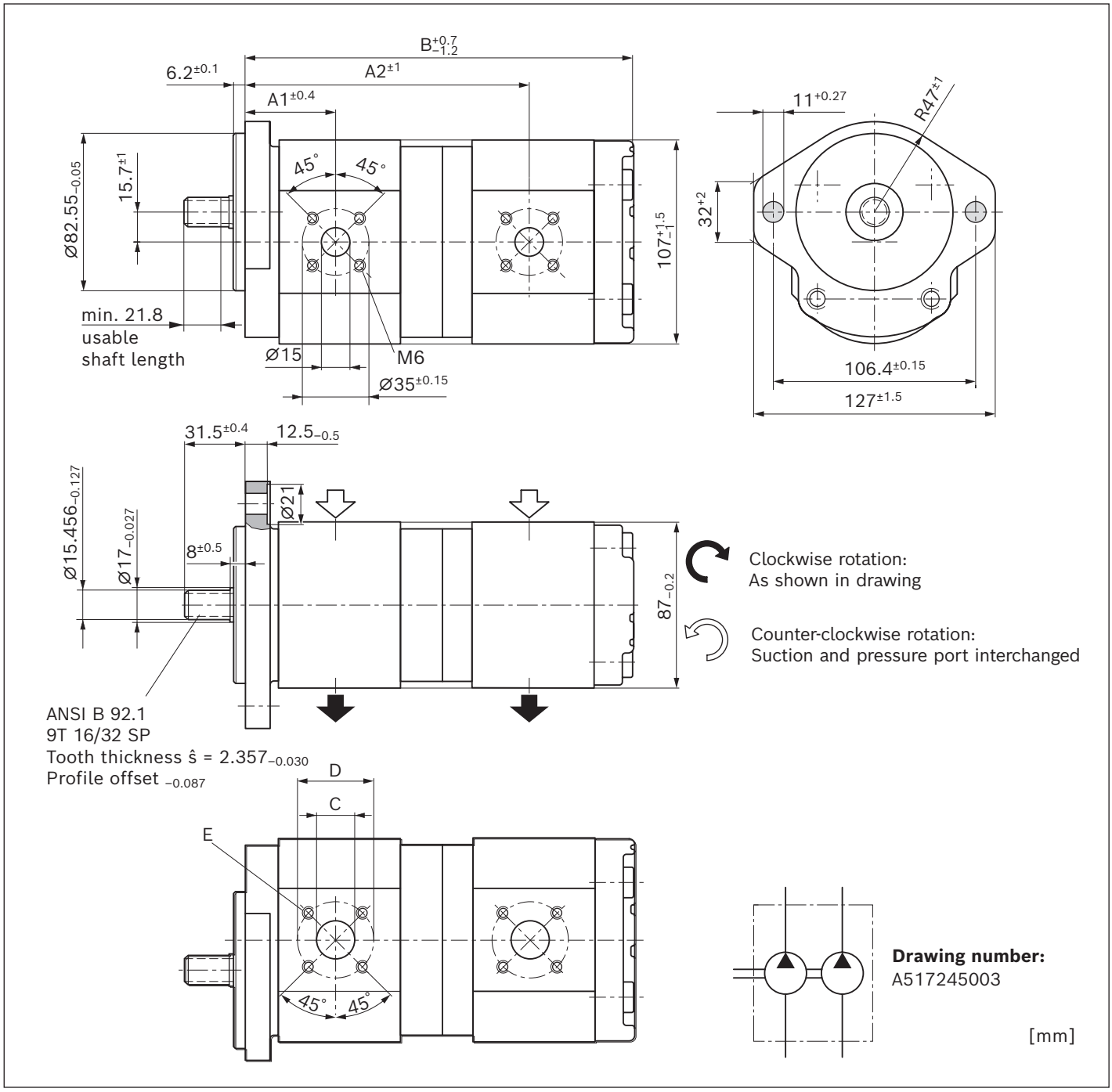

NG		Material number	Max. pressure intermittend		Maximum speed	Weight	Dimensions					
P_I	P_{II}	Direction of rotation	$p_{2\,I}$	$p_{2\,II}$	n_{max}	m	A_1	A_2	B	C [1]	D	E
		clockwise	bar	bar	rpm	kg	mm	mm	mm	mm	mm	
16	5	0 517 665 007	280	280	3000	5.8	47.5	142.8	186.9	20	40	M6; 13 mm deep

[1] At pump section with size 4 and 5: C = 15 mm

Project planning information

Technical data

All mentioned technical data are dependent on manufacturing tolerances and are applicable for certain boundary conditions.
Note that certain deviations are therefore possible and that technical data may vary when certain boundary conditions (e.g., viscosity) change.
Pumps delivered by Bosch Rexroth are tested for function and performance.
The pump may only be operated with the permissible data (see chapter "Technical data").

Characteristic curves
When dimensioning the gear pump, observe the maximum possible application data on the basis of the characteristic curves shown.

Application information

External gear units are not approved in on-highway vehicles for safety-relevant functions, as well as functions in the drive train, for steering, braking and level regulation. Classified as on-highway vehicles are e.g. vehicles such as motorbikes, private cars, trucks, vans, freight cars, buses and trailers. The European vehicle classes L (motorbikes), M (private cars), N (vehicles for transporting goods such as trucks and vans) and O (trailers and semi-trailers) serve as reference.

Filtration of the hydraulic fluid

Since the majority of premature failures in gear pumps occur due to contaminated hydraulic fluid, filtration should maintain a cleanliness level of 20/18/15 as defined by ISO 4406. Thus contamination can be reduced to an acceptable degree in terms of particle size and concentration.
Bosch Rexroth generally recommends full-flow filtration.
The basic contamination of the hydraulic fluid filled in should not exceed class 20/18/15 as defined by ISO 4406. New fluids are often above this value. In such instances, a filling device with a special filter should be used.
Bosch Rexroth is not liable for wear due to contamination.
For hydraulic systems or devices with function-related, critical failure effects, such as steering and brake valves, the type of filtration selected must be adapted to the sensitivity of these devices.

Notice
- When used as an auxiliary steering pump, the vehicle manufacturer should make sure that the steering system continues to operate safely as per ECE R-79 even if the auxiliary steering pump fails.

Further information

Installation drawings and dimensions are valid at date of publication, subject to modifications.
Further information and notes on project planning can be found in the “General Operating Instructions for External Gear Units” (07012-B, chapter 5.5).

Information

AZ configurator

With our practical product selector, it will take you next to no time to find the right solution for your applications, no matter whether it is SILENCE PLUS or another external gear unit.
The selector guides you through a selection of features to all of the products available for order. By clicking on the order number, you can view and download the following product information: Data sheet, dimension sheet, operating conditions, and tightening torques.
You can order your selection directly via our online shop and at the same time benefit from an additional discount of 2%. And if you need something really quickly, simply use our fast delivery and preferred programs (GoTo). Then the goods will be sent within 10 working days.
You also have the possibility to easily and conveniently configure your individual external gear unit with our AZ configurator. All the necessary data that you need for the project planning of external gear units is requested by means of the menu navigation.
For an already existing configuration you receive as a result the order number, the type code, as well as further information. If your configuration does not lead to a product that is available for order, our online tools provide you with the possibility of sending a project request directly to Bosch Rexroth. We will then get in contact with you.
Link: www.boschrexroth.com/az-configurator

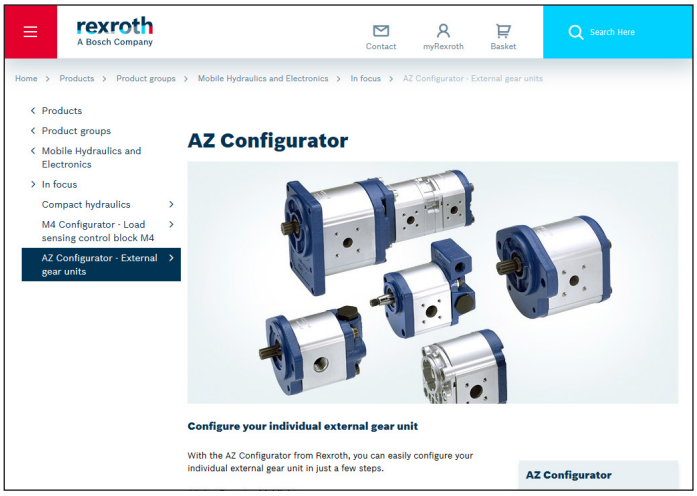

Spare parts

Spare parts can be found online at
www.boschrexroth.com/eshop
Select "Spare parts and accessories" and enter the material number of the external gear units into the search field.

Example:
Material number: **0 517 215 301**
Type designation: AZPS-11-004LNT20MB-S0002

All available spare parts are listed under "Spare parts" and can be ordered via the shopping basket.

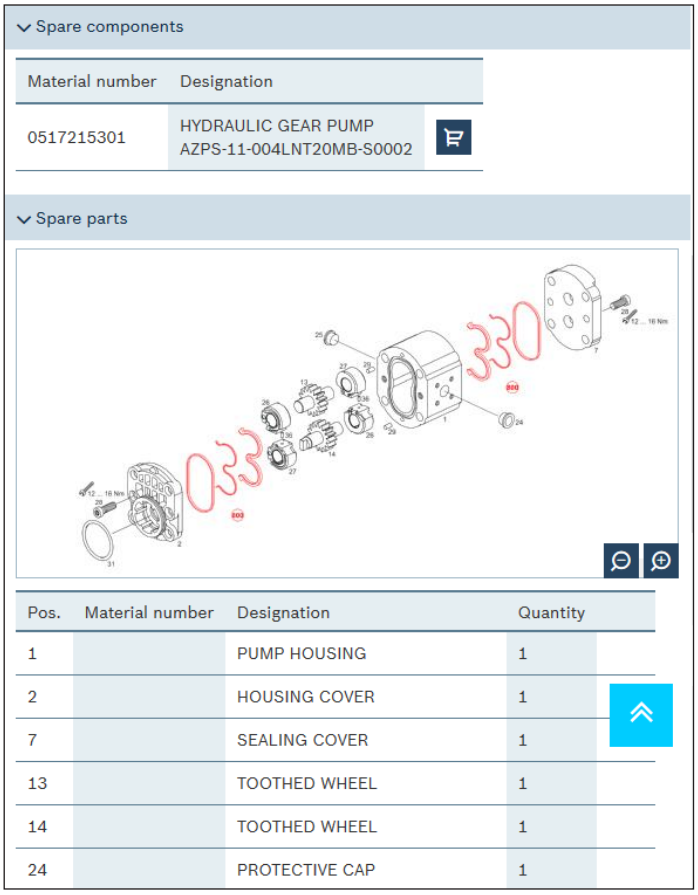

Spare components

Material number	Designation
0517215301	HYDRAULIC GEAR PUMP AZPS-11-004LNT20MB-S0002

Spare parts

Pos.	Material number	Designation	Quantity
1		PUMP HOUSING	1
2		HOUSING COVER	1
7		SEALING COVER	1
13		TOOTHED WHEEL	1
14		TOOTHED WHEEL	1
24		PROTECTIVE CAP	1

Further information

- Extensive notes and suggestions can be found in the Hydraulic Trainer, volume 3: “Planning and Design of Hydraulic Power Systems”, order number R900018547.

Accessories

Straight flange, for square flange 20

Complete screw connections with O-ring, metric screw set, nuts and olive.

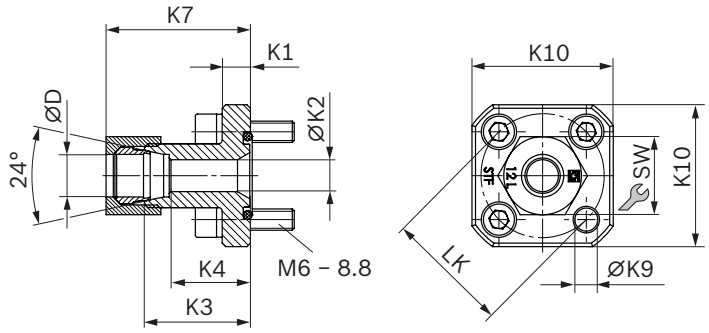

LK	D	Series [1]	Material number	p_{max}	K1	K2	K3	K4	K7	K9	K10	SW	Screws	O-ring	Weight
mm	mm			bar	mm	mm	mm	mm	mm	mm	mm	mm	4 ×	NBR	kg
35	10	L	1 515 702 064	315	8	7	30	23	38	6.5	40	19	M6 × 22	20 × 2.5	0.13
35	12	L	1 515 702 065	315	8	9	30	23	38.5	6.5	40	22	M6 × 22	20 × 2.5	0.14
35	15	L	1 515 702 066	250	8	11	30	23	39	6.5	40	27	M6 × 22	20 × 2.5	0.15
40	15	L	1 515 702 067	100	8	11	35	28	44	6.5	40	27	M6 × 22	26 × 2.5	0.16
40	18	L	1 515 702 068	100	8	14	35	27.5	44	6.5	40	32	M6 × 22	26 × 2.5	0.17
40	22	L	1 515 702 069	100	8	18	35	27.5	45	6.5	40	36	M6 × 22	26 × 2.5	0.16
40	28	L	1 515 702 008	100	8	19	35	27.5	45	6.5	40	41	M6 × 22	26 × 2.5	0.18

[1] See DIN EN ISO 8434-1

90° angle flange, for square flange 20

Complete screw connections with O-ring, metric screw set, nuts and olive.

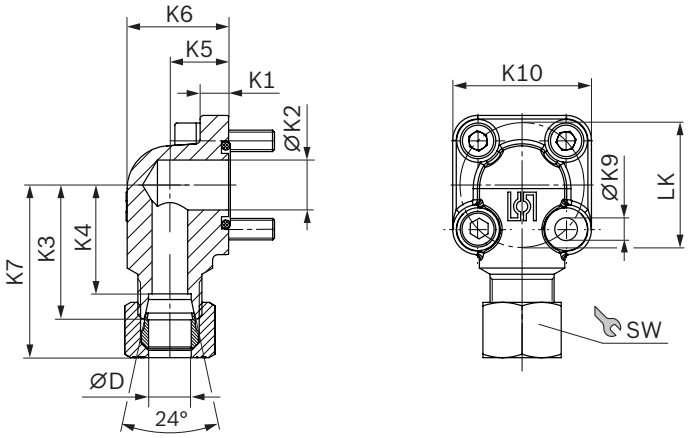

LK	D	Series [1]	Material number	p_{max}	K1	K2	K3	K4	K5	K6	K7	K9	K10	SW	Screws		O-ring	Weight
mm	mm			bar	mm	mm	mm	mm	mm	mm	mm	mm	mm	mm	2 ×	2 ×	NBR	kg
35	10	L	1 515 702 070	315	8	14	37,5	30,5	16,5	28,5	45	6,4	39	19	M6 × 22	M6 × 35	20 × 2.5	0,18
35	12	L	1 515 702 071	315	8	14	37,5	30,5	16,5	28,5	46	6,4	39	22	M6 × 22	M6 × 35	20 × 2.5	0,19
35	15	L	1 515 702 072	250	8	14	37,5	30,5	16,5	28,5	46	6,4	39	27	M6 × 22	M6 × 35	20 × 2.5	0,2
35	16	S	1 515 702 002	315	8	15	38	29,5	20	33	49	6,4	39	30	M6 × 22	M6 × 40	20 × 2.5	0,25
35	18	L	1 545 702 006	250	8	15	37,5	30	20	33	47	6,4	39	32	M6 × 22	M6 × 40	20 × 2.5	0,22
35	20	S	1 515 702 017	315	8	15	45	34,5	25	38	57	6,4	39	36	M6 × 22	M6 × 45	20 × 2.5	0,3
40	15	L	1 515 702 073	100	9	20	38	31	22,5	38	47	6,4	42	27	M6 × 22	M6 × 22	26 × 2.5	0,26
40	18	L	1 515 702 074	100	9	20	38	30,5	22,5	38	47,5	6,4	42	32	M6 × 22	M6 × 22	26 × 2.5	0,27
40	20	S	1 515 702 011	250	9	20	40	29,5	22,5	37	52	6,4	42	36	M6 × 22	M6 × 45	26 × 2.5	0,26
40	22	L	1 515 702 075	100	9	20	38	30,5	22,5	38	48	6,4	42	36	M6 × 22	M6 × 22	26 × 2.5	0,27
40	28	L	1 515 702 010	100	9	20	40	32,5	28	44	50,5	6,4	42	41	M6 × 22	M6 × 50	26 × 2.5	0,37
40	35	L	1 515 702 018	100	9	20	41	30,5	34	53	53	6,4	42	50	M6 × 22	M6 × 60	26 × 2.5	0,41
55	20	S	1 515 702 004	250	13	18,2	45	34,5	24	38	57	8,4	58	36	M8 × 25	M8 × 50	32 × 2.5	0,62
55	30	S	1 545 719 006	250	12	26,5	49	38,5	32	51	63,5	8,4	58	50	M8 × 25	M8 × 50	32 × 2.5	0,63
55	35	L	1 515 702 005	100	12	26,5	49	38,5	32	52	61	8,4	58	50	M8 × 25	M8 × 60	32 × 2.5	0,77
55	42	L	1 515 702 019	100	12	26,5	49	38	40	64	61,5	8,4	58	60	M8 × 25	M8 × 70	32 × 2.5	1,04

[1] See DIN EN ISO 8434-1

90° angle flange, 3-hole, for square flange 30

Complete screw connections with O-ring, metric screw set, nuts and olive.

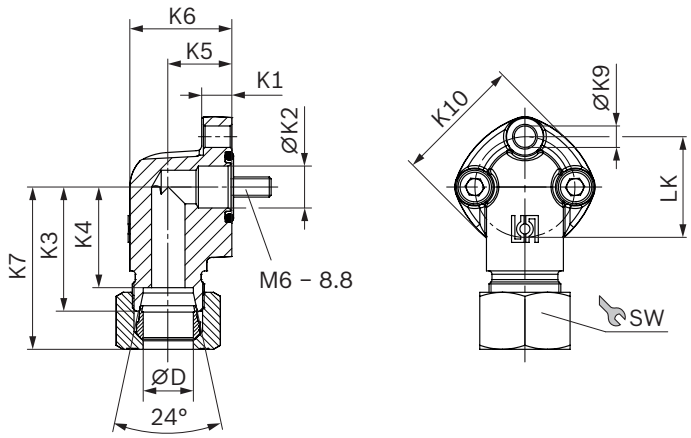

LK	D	Series [1]	Material number	p_{max}	K1	K2	K3	K4	K5	K6	K7	K9	K10	SW	Screws	O-ring	Weight
mm	mm			bar	mm	mm	mm	mm	mm	mm	mm	mm	mm	mm	3 ×	NBR	kg
30	12	L	1 515 702 146	250	9	12.5	37	30	19	30.5	46	6.4	38	22	M6 × 25	16 × 2.5	0.18
30	15	L	1 515 702 147	250	9	12.5	37	30	19	30.5	45.5	6.4	38	27	M6 × 25	16 × 2.5	0.2
40	22	L	1 515 702 149	160	13.5	19	43	35.5	25	41	53	8.4	48	36	M8 × 30	24 × 2.5	0.4
40	28	L	1 515 702 150	160	13.5	19	43	35.5	25	41	53.5	8.4	48	41	M8 × 30	24 × 2.5	0.36

[1] See DIN EN ISO 8434-1

Note

- Permissible tightening torques can be found in the “General instruction manual for external gear units” (07012-B).

Bosch Rexroth AG
Robert-Bosch-Straße 2
71701 Schwieberdingen
Germany
brm-az.info@boschrexroth.de
www.boschrexroth.com

© Bosch Rexroth AG 2021. All rights reserved, also regarding any disposal, exploitation, reproduction, editing, distribution, as well as in the event of applications for industrial property rights.
The data specified above only serve to describe the product. No statements concerning a certain condition or suitability for a certain application can be derived from our information. The information given does not release the user from the obligation of own judgment and verification. It must be remembered that our products are subject to a natural process of wear and aging.